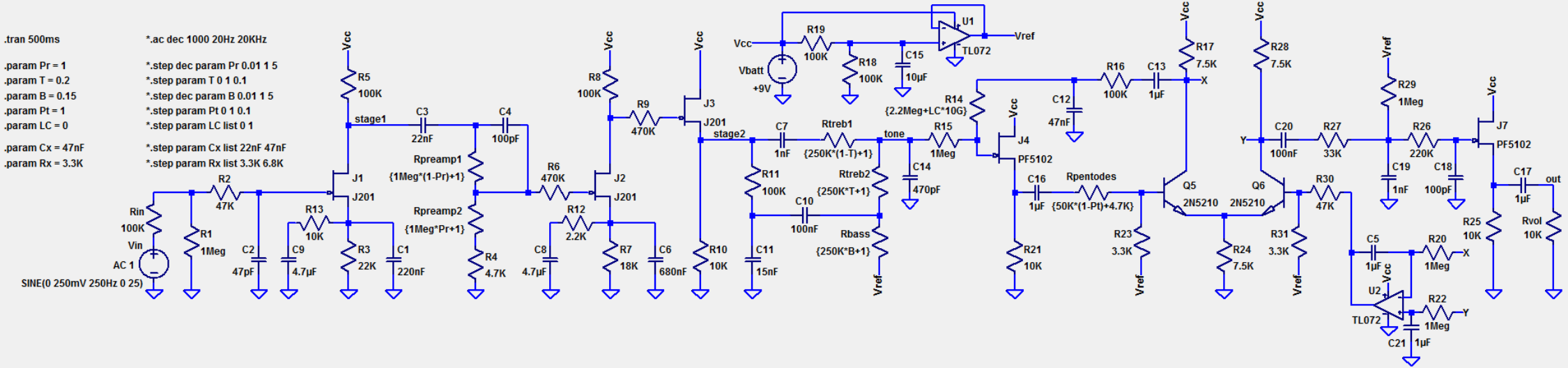
.tran 500ms
.param Pr = 1
.param T = 0.2
.param B = 0.15
.param Pt = 1
.param LC = 0
.param Cx = 47nF
.param Rx = 3.3K
*.ac dec 1000 20Hz 20KHz
*.step dec param Pr 0.01 1 5
*.step param T 0 1 0.1
*.step dec param B 0.01 1 5
*.step param Pt 0 1 0.1
*.step param LC list 0 1
*.step param Cx list 22nF 47nF
*.step param Rx list 3.3K 6.8K
Rin 100K
Vin
AC 1
SINE(0 250mV 250Hz 0 25)
R1 1Meg
R2 47K
C2 47pF
R13 10K
C9 4.7µF
R3 22K
C1 220nF
J1 J201
stage1
R5 100K
Vcc
C3 22nF
C4 100pF
Rpreamp1 {1Meg*(1-Pr)+1}
Rpreamp2 {1Meg*Pr+1}
R4 4.7K
R6 470K
R12 2.2K
C8 4.7µF
J2 J201
R7 18K
C6 680nF
R8 100K
R9 470K
R10 10K
J3 J201
stage2
C7 1nF
R11 100K
C10 100nF
C11 15nF
Rtreb1 {250K*(1-T)+1}
Rtreb2 {250K*T+1}
Rbass {250K*B+1}
Vref
tone
C14 470pF
R15 1Meg
R14 {2.2Meg+LC*10G}
Vbatt +9V
R19 100K
R18 100K
C15 10µF
U1 TL072
C12 47nF
R16 100K
C13 1µF
J4 PF5102
C16 1µF
Rpentodes {50K*(1-Pt)+4.7K}
R21 10K
R17 7.5K
X
Q5 2N5210
R23 3.3K
R24 7.5K
Q6 2N5210
R28 7.5K
Y
C20 100nF
R27 33K
R31 3.3K
R30 47K
R29 1Meg
C19 1nF
R26 220K
C18 100pF
J7 PF5102
C17 1µF
out
R25 10K
Rvol 10K
C5 1µF
R20 1Meg
U2 TL072
R22 1Meg
C21 1µF