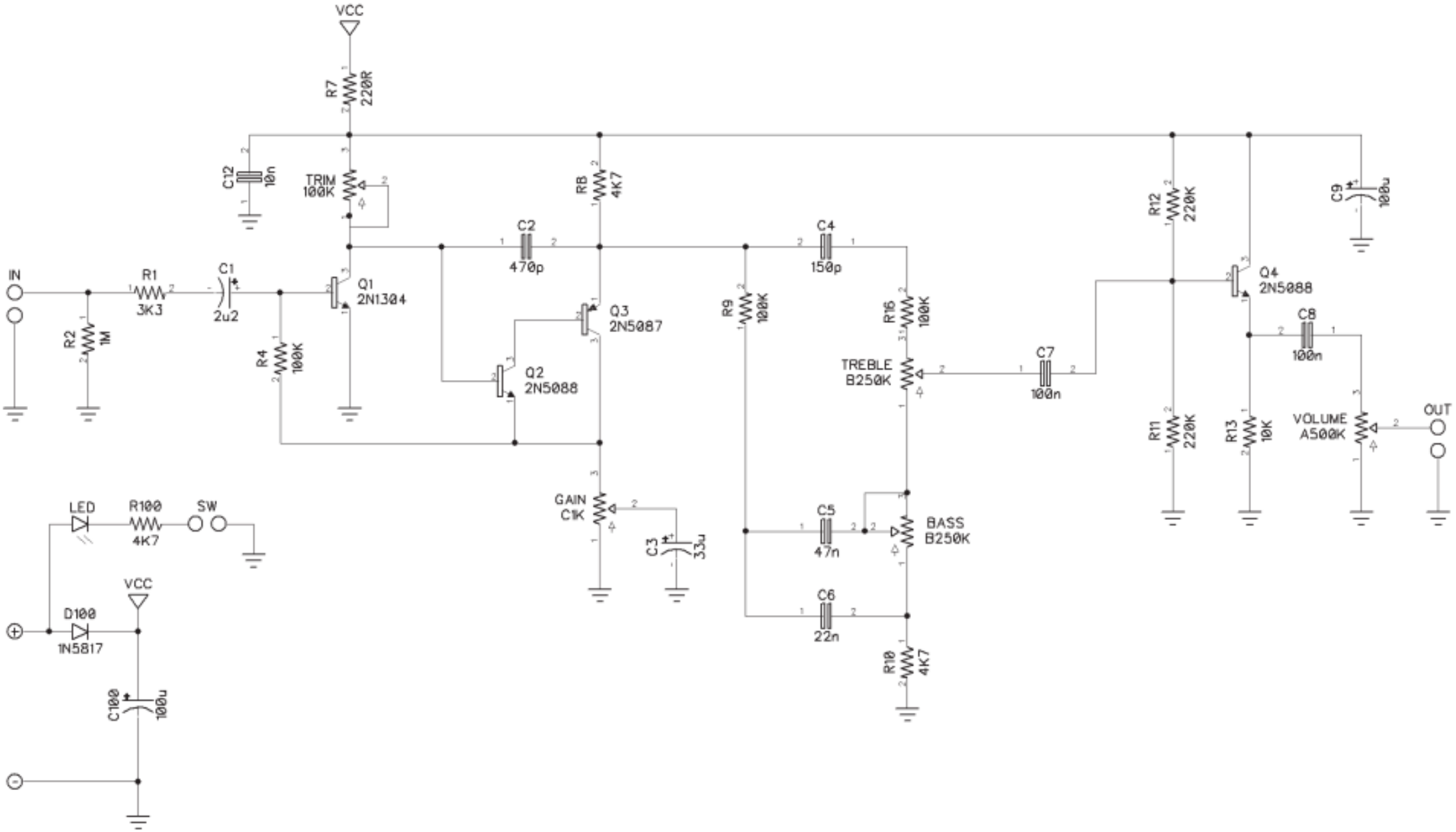
VCC
R7
220R
C12
10n
TRIM
100K
R8
4K7
C2
470p
C4
150p
R12
220K
C9
100u
IN
R1
3K3
C1
2u2
Q1
2N1304
Q3
2N5087
Q2
2N5088
R9
100K
R16
100K
Q4
2N5088
C8
100n
R2
1M
R4
100K
TREBLE
B250K
C7
100n
R11
220K
R13
10K
VOLUME
A500K
OUT
GAIN
C1K
C3
33u
C5
47n
BASS
B250K
C6
22n
R10
4K7
LED
R100
4K7
SW
VCC
D100
1N5817
C100
100u