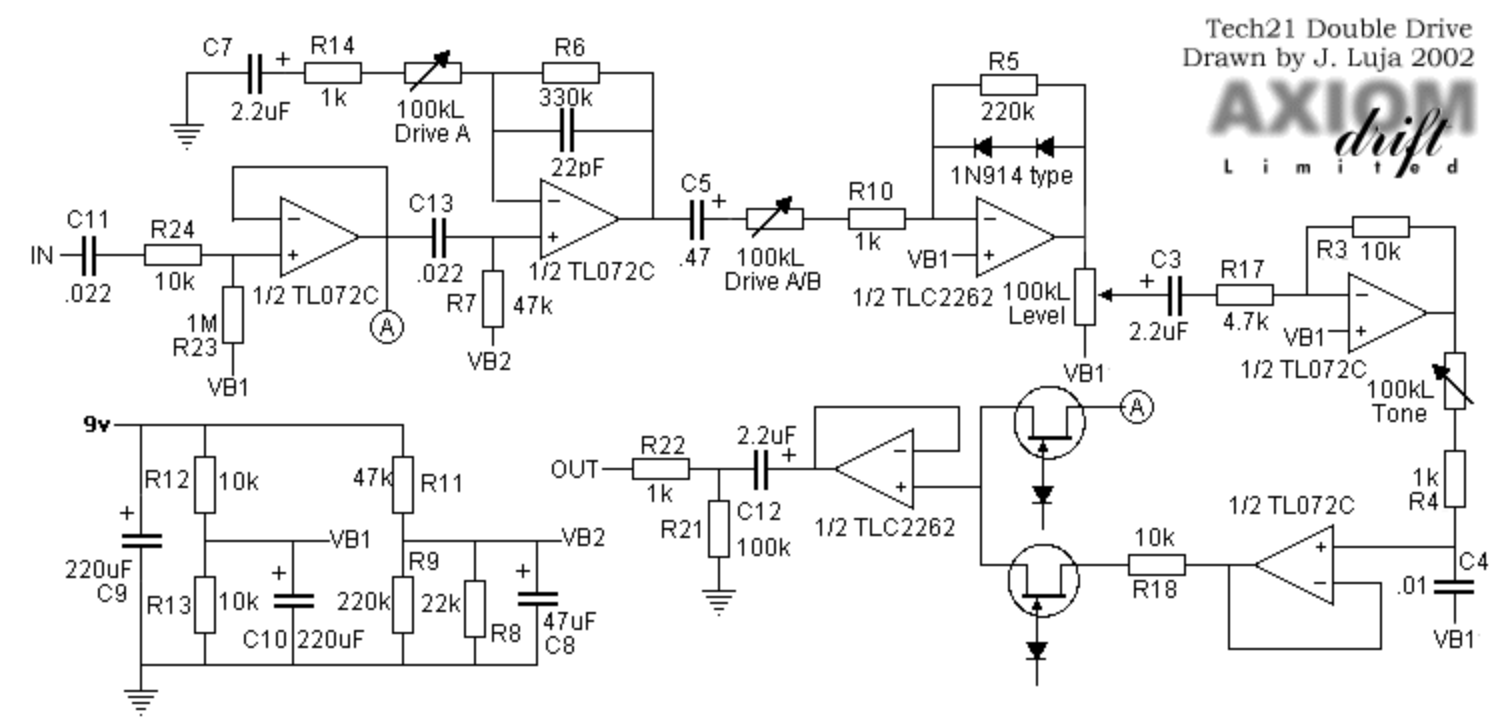
Tech21 Double Drive
Drawn by J. Luja 2002
AXIOM drift Limited
C7
2.2uF
R14
1k
100kL
Drive A
R6
330k
22pF
C11
.022
IN
R24
10k
1M
R23
VB1
1/2 TL072C
A
C13
.022
R7
47k
VB2
1/2 TL072C
C5
.47
100kL
Drive A/B
R10
1k
R5
220k
1N914 type
VB1
1/2 TLC2262
100kL
Level
C3
2.2uF
R17
4.7k
R3
10k
VB1
1/2 TL072C
100kL
Tone
1k
R4
C4
.01
VB1
9v
R12
10k
47k
R11
220uF
C9
VB1
VB2
R13
10k
C10
220uF
R9
220k
22k
R8
47uF
C8
OUT
R22
1k
2.2uF
R21
C12
100k
1/2 TLC2262
VB1
A
10k
R18
1/2 TL072C