Alpha Dog

http://www.vfepedals.com/

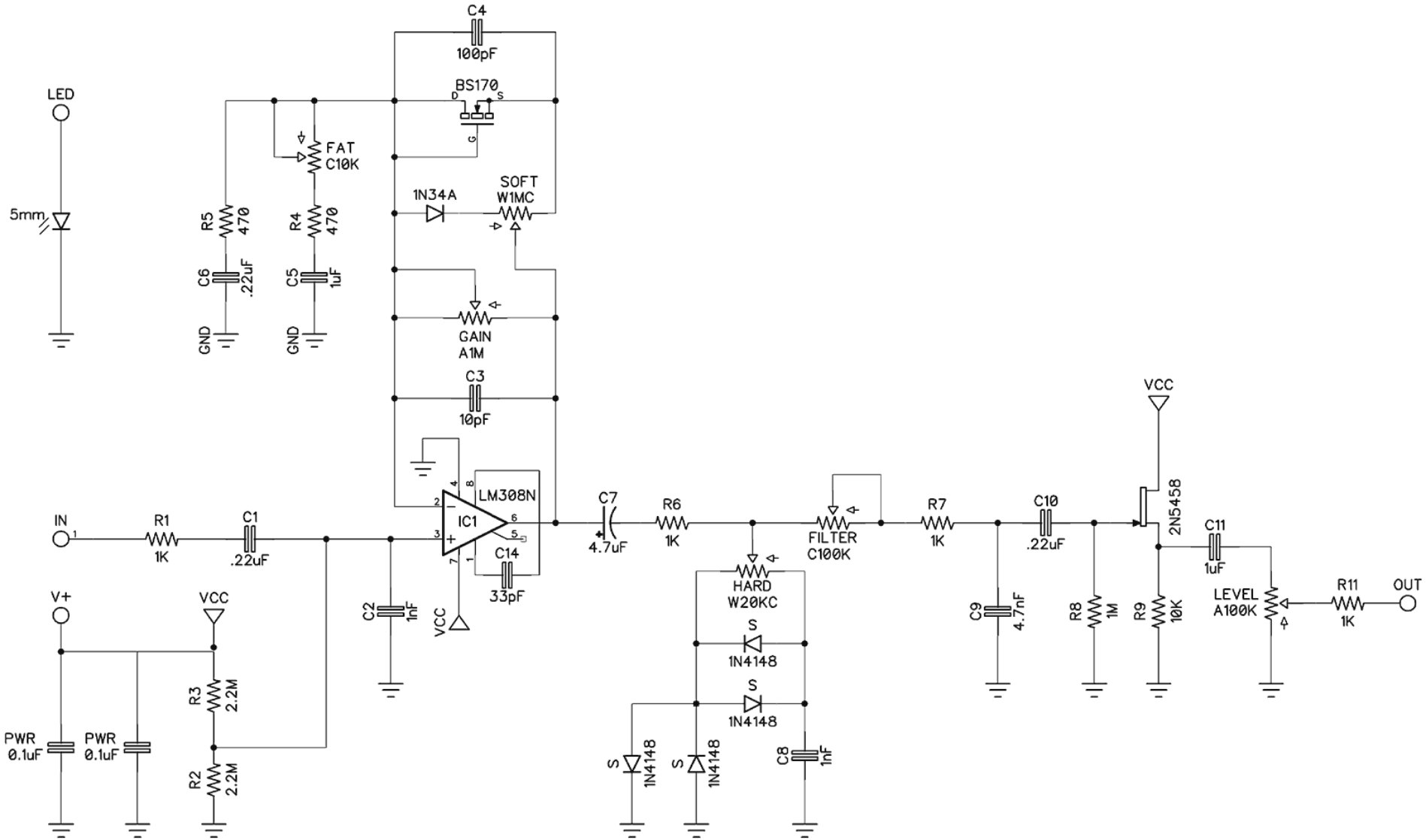

Copyright © 2016 VFE Pedals - All Rights Reserved