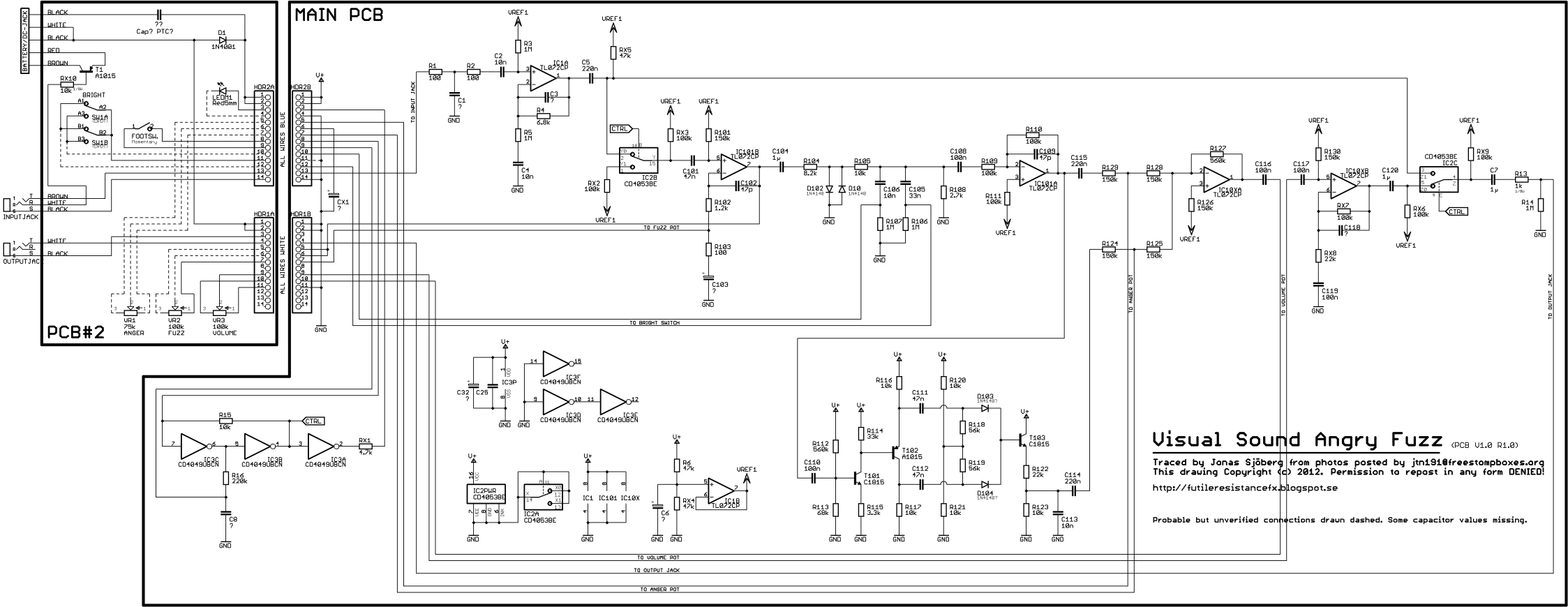
MAIN PCB
PCB#2
BATTERY/DC-JACK
BLACK
WHITE
BLACK
RED
BROWN
Cap? PTC?
D1
1N4001
T1
A1015
RX10
10k
BRIGHT
SW1A
SW1B
FOOTSW
Momentary
LED1
Red5mm
HDR2A
HDR2B
HDR1A
HDR1B
ALL WIRES BLUE
ALL WIRES WHITE
INPUTJACK
OUTPUTJAC
VR1
75k
ANGER
VR2
100k
FUZZ
VR3
100k
VOLUME
CX1
TO INPUT JACK
TO FUZZ POT
TO BRIGHT SWITCH
TO VOLUME POT
TO OUTPUT JACK
TO ANGER POT
VREF1
IC1A
TL072CP
IC1B
TL072CP
IC2B
CD4053BE
IC2C
CD4053BE
IC2A
CD4053BE
IC2PWR
CD4053BE
IC3C
CD4049UBCN
IC3A
CD4049UBCN
IC3P
IC3F
CD4049UBCN
IC3D
CD4049UBCN
IC3E
CD4049UBCN
IC1A
TL072CP
IC1B
TL072CP
IC1C
TL072CP
IC1D
TL072CP
IC1E
TL072CP
IC1F
TL072CP
IC1G
TL072CP
IC1H
TL072CP
IC1
IC101
IC10X
CTRL
Visual Sound Angry Fuzz (PCB V1.0 R1.0)
Traced by Jonas Sjöberg from photos posted by jtn1910@freestompboxes.org
This drawing Copyright (c) 2012. Permission to repost in any form DENIED!
http://futileresistancefx.blogspot.se
Probable but unverified connections drawn dashed. Some capacitor values missing.