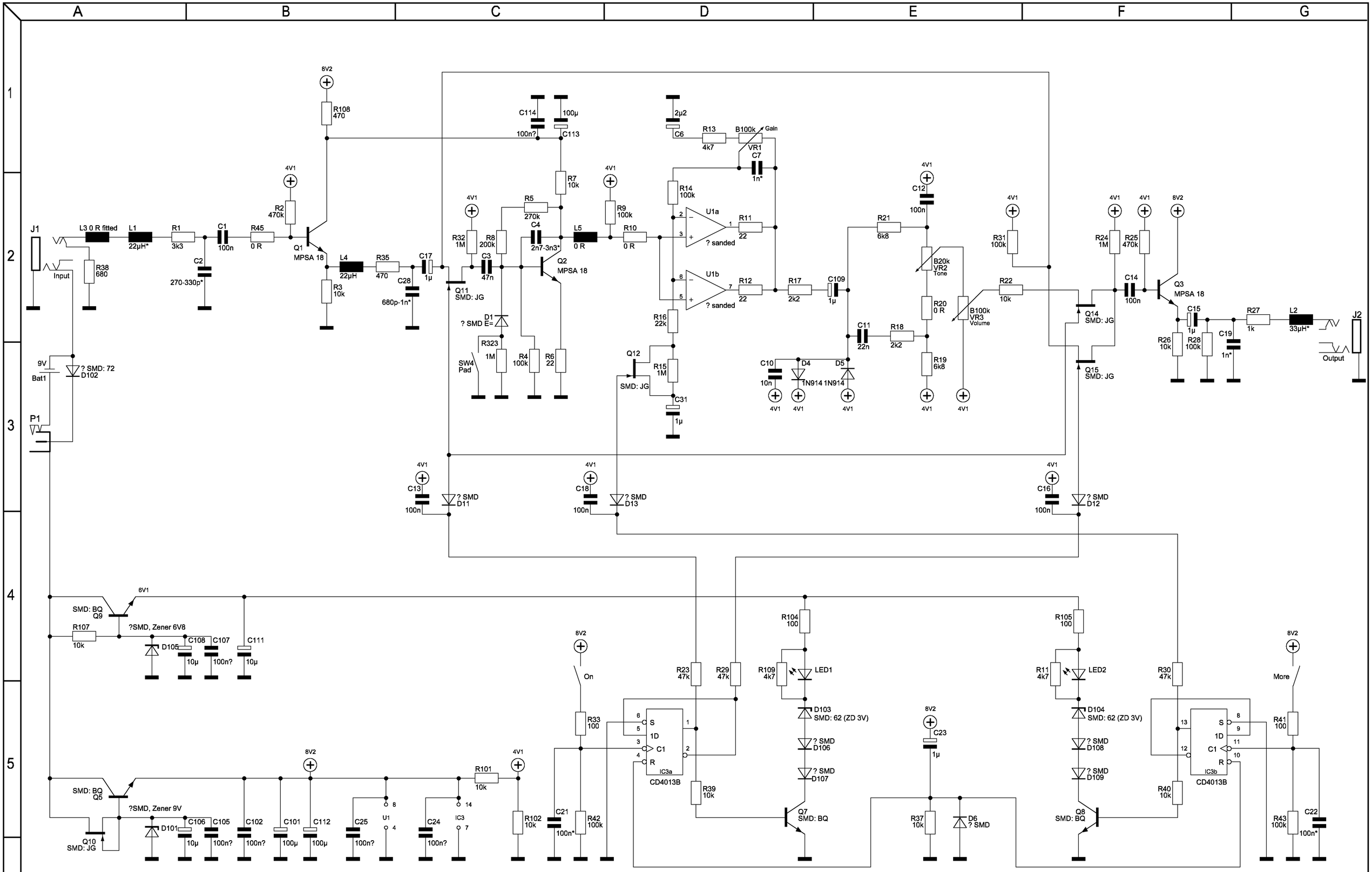

- Values with * measured in cirquit
- Values with ? estimated to make best sense
- Components with ? unknown SMD marking or sanded (OP-Amp)
- ZDs: Voltage measured
- D6, D11, D12, D13, D106, D107, D108, D109 same type, most probably similar as 1N4148
- Q10, 11, 12, 14, 15 most probably 2SK879
- SMD: BQ = 2SC2412 (Q5, Q7, Q8, Q9)
- Don't understand the sense of R9
- Mid mod: C3 = 39n instead 47n

Änderungen			Datum	Name	Bezeichnung:	Blattzahl:
Datum	Name	gez.:	Feb 2021		VOX SATCHURATOR	
		gepr.:			drawn by M. Bender	Blatt-Nr.:
					Zeichnungs-Nr.:	