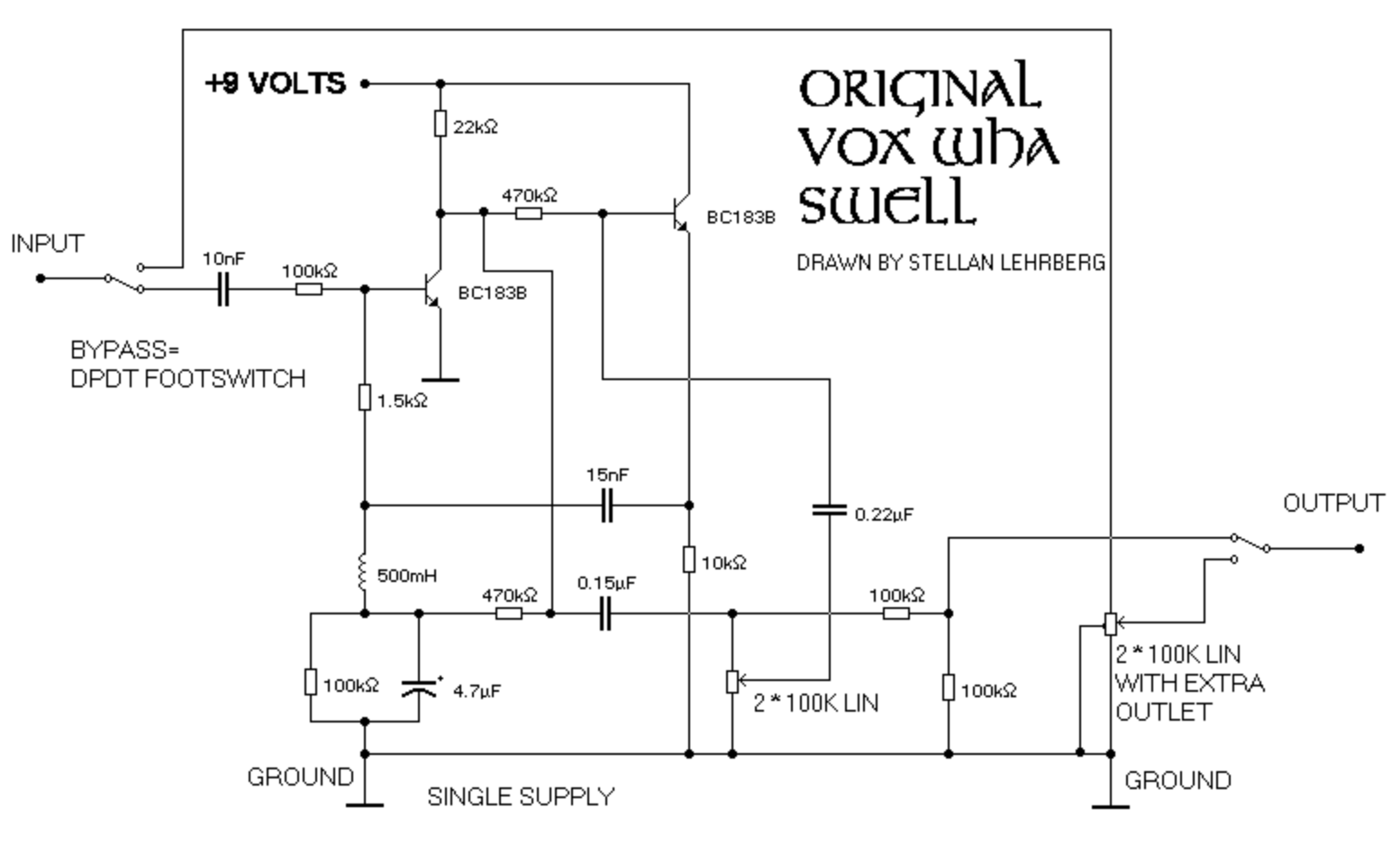
ORIGINAL
VOX WHA
SWELL
DRAWN BY STELLAN LEHRBERG
+9 VOLTS
22kΩ
470kΩ
BC183B
INPUT
10nF
100kΩ
BC183B
BYPASS=
DPDT FOOTSWITCH
1.5kΩ
15nF
0.22µF
OUTPUT
500mH
470kΩ
0.15µF
10kΩ
100kΩ
100kΩ
4.7µF
2 * 100K LIN
100kΩ
2 * 100K LIN
WITH EXTRA
OUTLET
GROUND
SINGLE SUPPLY
GROUND