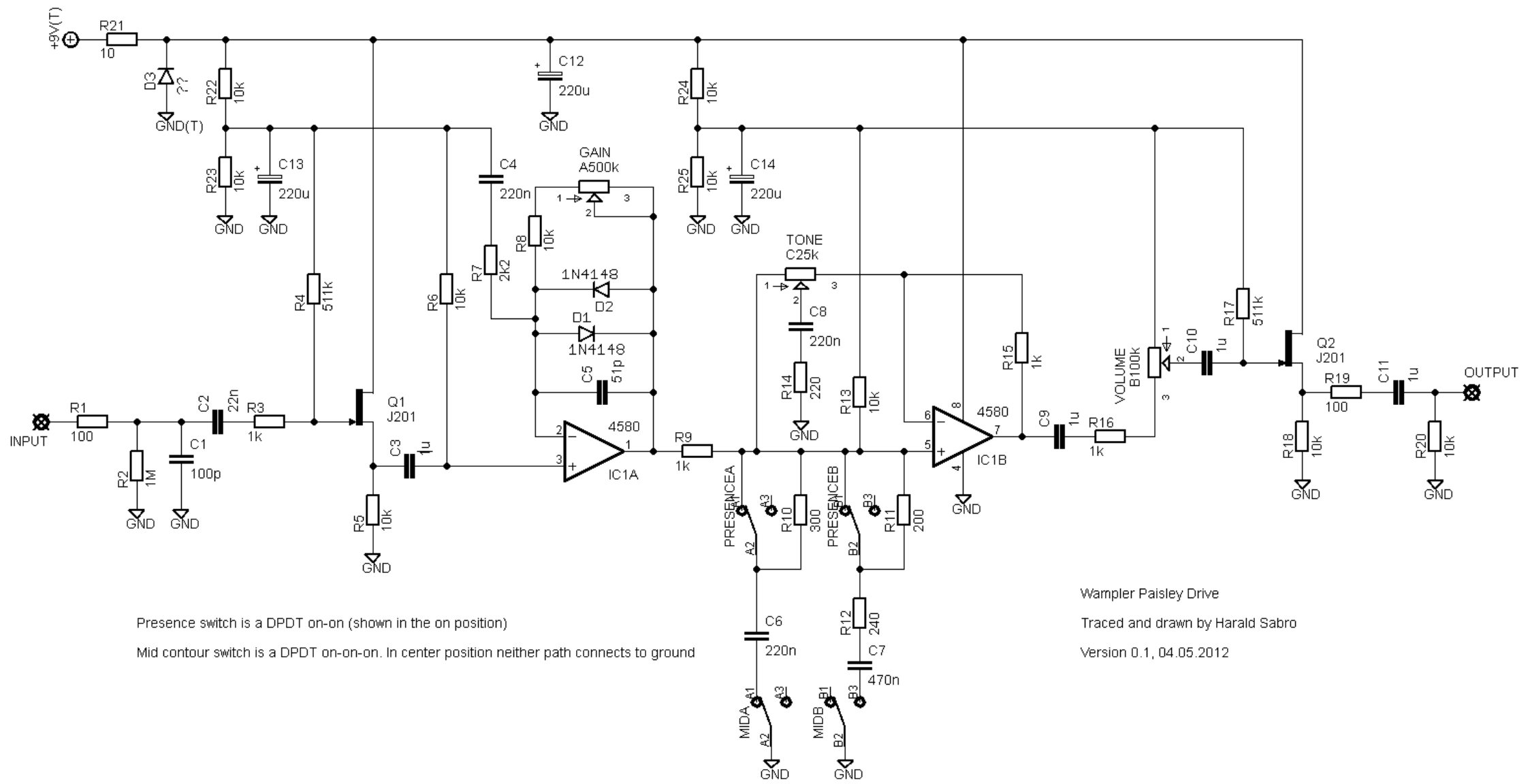


Presence switch is a DPDT on-on (shown in the on position)

Mid contour switch is a DPDT on-on-on. In center position neither path connects to ground

Wampler Paisley Drive

Traced and drawn by Harald Sabro

Version 0.1, 04.05.2012