THIS SCHEMATIC IS NOT INTENDED FOR COMMERCIAL USE
DO NOT REPOST WITHOUT PERMISSION!!!

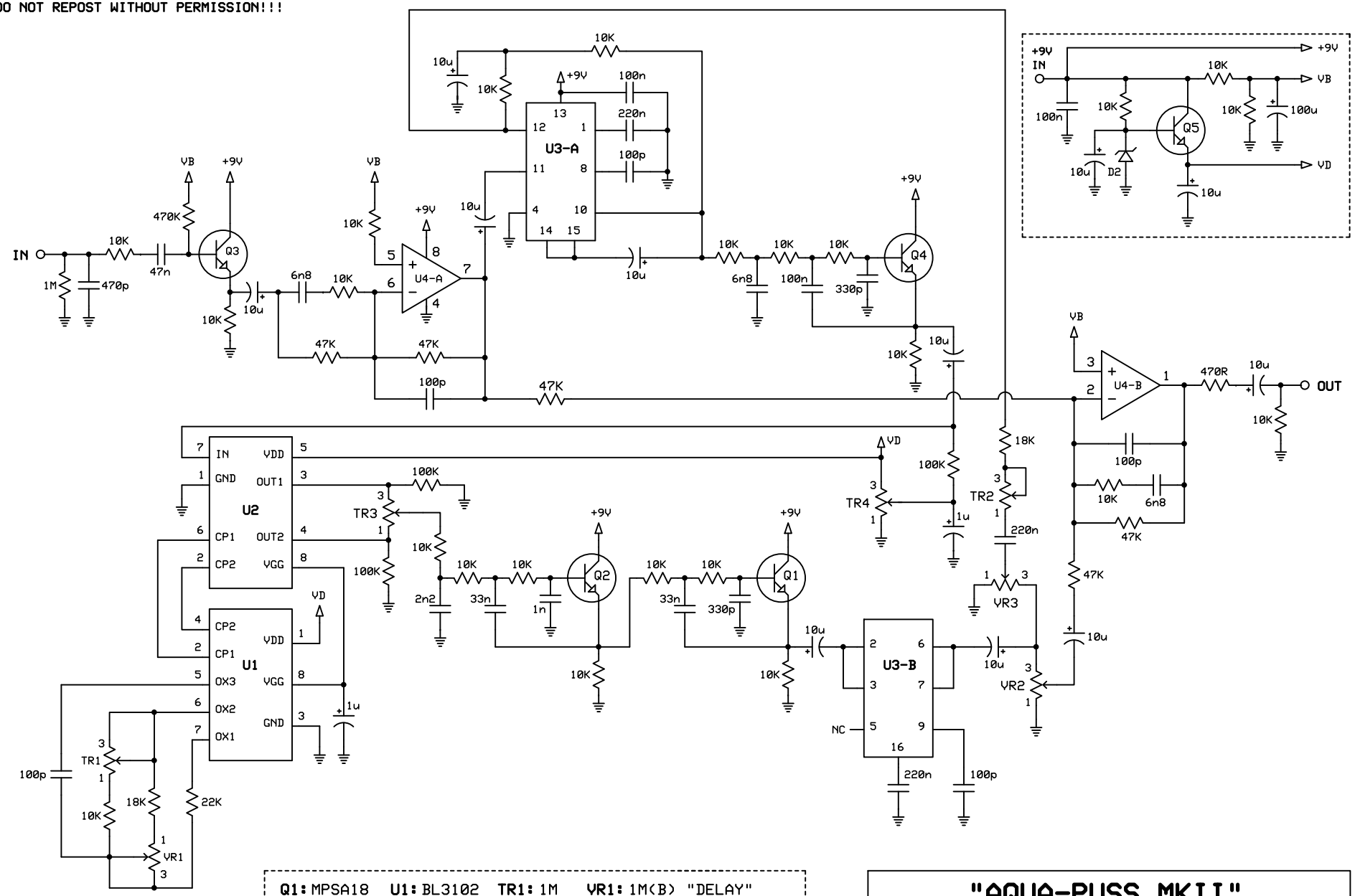

Q1: MPSA18	**U1:** BL3102	**TR1:** 1M	**VR1:** 1M(B) "DELAY"
Q2: MPSA18	**U2:** V3205D	**TR2:** 50K	**VR2:** 50K(B) "BLEND"
Q3: PN2484	**U3:** SA571N	**TR3:** 10K	**VR3:** 50K(B) "FEEDBACK"
Q4: MPSA18	**U4:** LF353N	**TR4:** 20K	
Q5: 2N3904	**D2:** 8.2V ZENER		

"AQUA-PUSS MKII"

Way Huge Electronics

drawn by: Timm H.	Rev 3.0	Page 1 of 1
	06/30/2012	