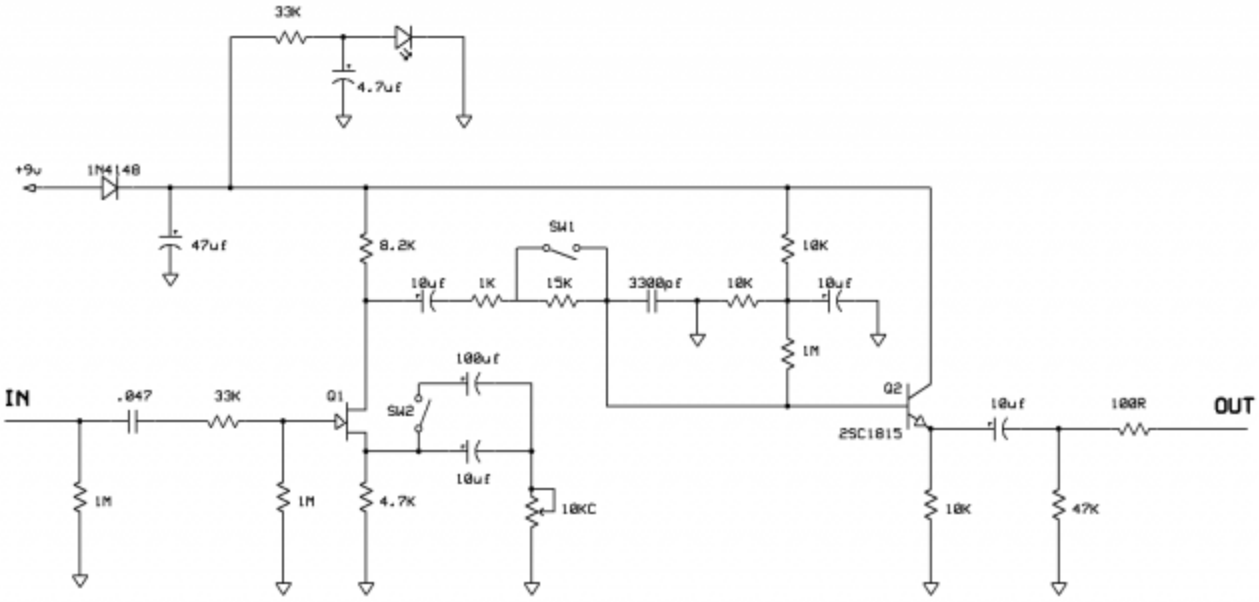

Drawn by Greg_G - 17 Nov 2009
FOR NON-COMMERCIAL USE ONLY

Xotic
EP Booster

Copyright 2009 Greg_G. All Rights Reserved. Permission To Post Refused.