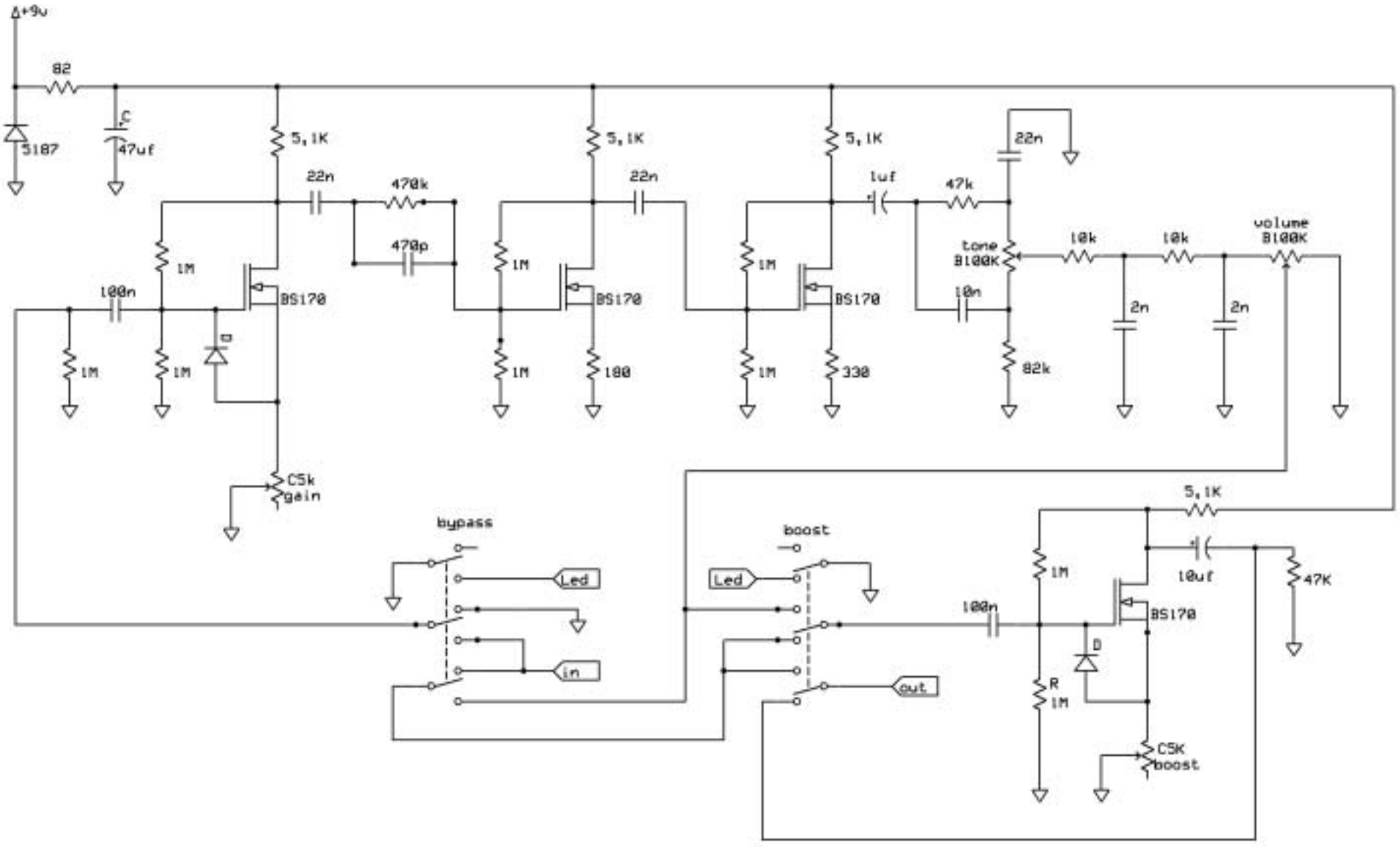

Rox of Bock

Mahali	Rev 1.0	