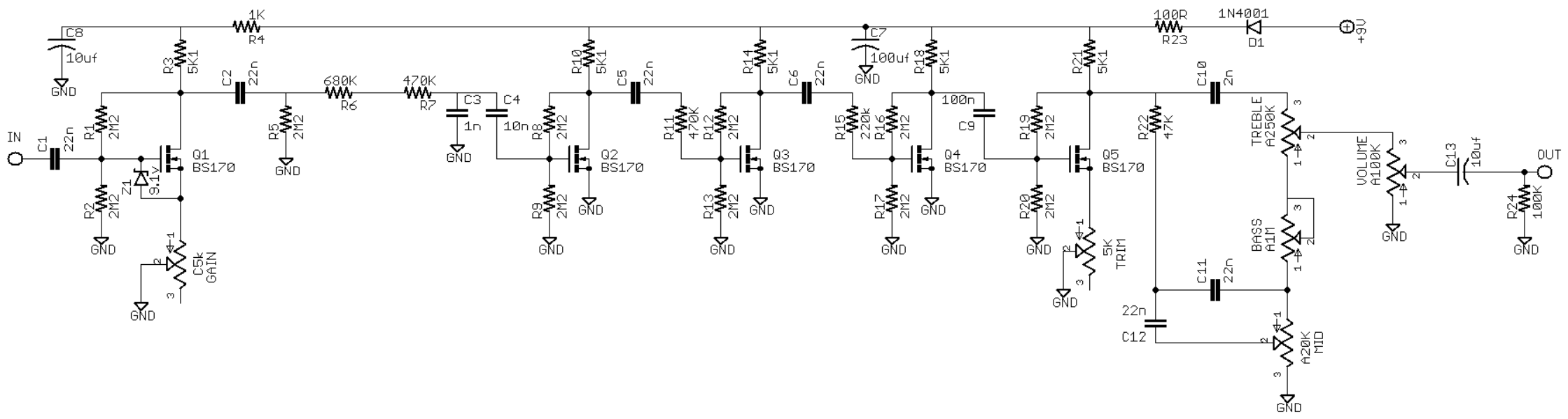
IN
C1
22n
R1
2M2
R2
2M2
Z1
9.1v
Q1
BS170
C5k
GAIN
C8
10uf
R3
5K1
1K
R4
C2
22n
R5
2M2
680K
R6
470K
R7
C3
1n
C4
10n
R8
2M2
R9
2M2
Q2
BS170
R10
5K1
C5
22n
R11
470K
R12
2M2
R13
2M2
Q3
BS170
R14
5K1
C6
22n
R15
220k
R16
2M2
R17
2M2
Q4
BS170
C7
100uf
R18
5K1
100n
C9
R19
2M2
R20
2M2
Q5
BS170
5K
TRIM
R21
5K1
R22
47K
C10
2n
C11
22n
22n
C12
TREBLE
A250K
BASS
A1M
A20K
MID
VOLUME
A100K
C13
10uf
R24
100K
OUT
100R
R23
1N4001
D1
+9V
GND