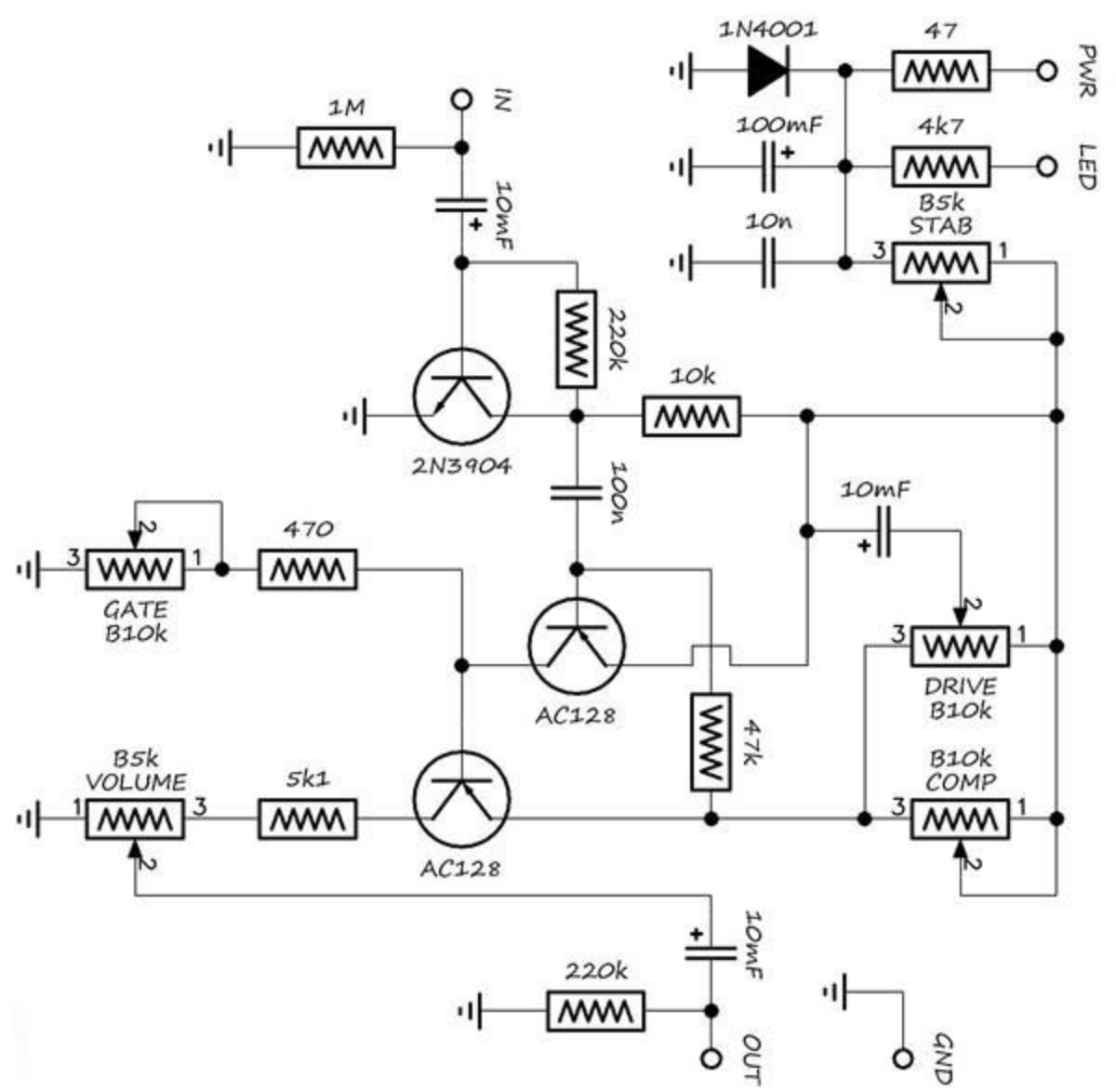
1N4001
47
PWR
100mF
4k7
LED
1M
IN
10mF
10n
B5k
STAB
220k
10k
2N3904
100n
10mF
470
GATE
B10k
AC128
DRIVE
B10k
47k
B5k
VOLUME
5k1
AC128
B10k
COMP
10mF
220k
OUT
GND