Ampeg

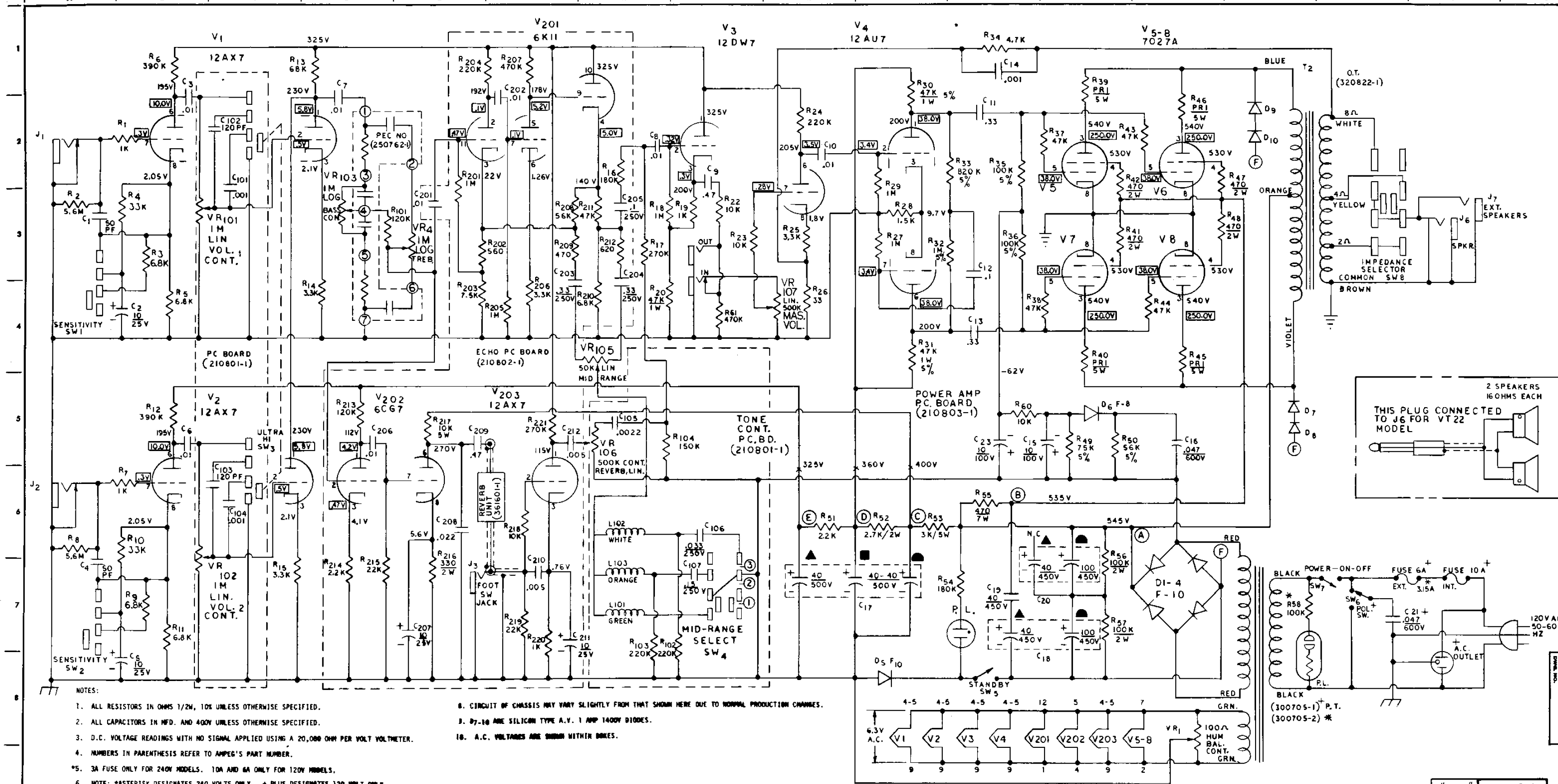

NOTES:

1. ALL RESISTORS IN OHMS 1/2W, 10% UNLESS OTHERWISE SPECIFIED.
2. ALL CAPACITORS IN MFD. AND 400V UNLESS OTHERWISE SPECIFIED.
3. D.C. VOLTAGE READINGS WITH NO SIGNAL APPLIED USING A 20,000 OHM PER VOLT VOLTMETER.
4. NUMBERS IN PARENTHESIS REFER TO AMPEG'S PART NUMBER.
*5. 3A FUSE ONLY FOR 240V MODELS. 10A AND 6A ONLY FOR 120V MODELS.
6. NOTE: *ASTERISK DESIGNATES 240 VOLTS ONLY. + PLUS DESIGNATES 120 VOLT ONLY.
7. D.C. VOLTAGE READINGS ARE POSITIVE WITH RESPECT TO CHASSIS GROUND UNLESS OTHERWISE SPECIFIED.
8. CIRCUIT OF CHASSIS MAY VARY SLIGHTLY FROM THAT SHOWN HERE DUE TO NORMAL PRODUCTION CHANGES.
9. D7-10 ARE SILICON TYPE A.V. 1 AMP 1400V DIODES.
10. A.C. VOLTAGES ARE SHOWN WITHIN BOXES.

7" x 11"	591780-1
SIZE	PART NO.

ADDITIONAL SPECIFICATIONS

MATERIAL

FINISH

— TOLERANCES — UNLESS OTHERWISE SPECIFIED

DECIMALS	± TOL.	FRACTIONS	± TOL.
.X	.030	UP TO 6	1/64
.XX	.020	6 TO 24	1/32
.XXX	.010	ABOVE 24	1/16

THREADS - CLASS 2 FIT AFTER PLATING — CONCENTRICITY .010 T.I.R.

MACHINE FINISHES 64 MICRO INCH MAX. — ANGULAR TOL. ± 1/2°

DIMENSIONS IN INCHES UNLESS OTHERWISE SPECIFIED ON DRAWING.

DO NOT SCALE DRAWING

THE AMPEG COMPANY
DIVISION OF THE MAGNAVOX COMPANY

SCHEMATIC

SIGNATURE	DATE
DR. W. LONGMIRE	6-13-77
CHK. L. Stroud	6-13-77
ENG. W. Hughes	6/13/77

FIRST USED IN ASSEMBLY

FIRST MADE FOR VT22, V4

SCALE

THIS MATERIAL IS THE PROPERTY OF, AND PROPRIETARY TO, THE MAGNAVOX COMPANY AND IS NOT TO BE DISCLOSED TO OTHERS OR USED FOR OTHER THAN AUTHORIZED MAGNAVOX PURPOSES WITHOUT THE WRITTEN PERMISSION OF THE MAGNAVOX COMPANY. THIS MATERIAL MUST BE RETURNED TO THE MAGNAVOX COMPANY WHEN THE HOLDER NO LONGER REQUIRES ITS USE FOR AUTHORIZED MAGNAVOX PURPOSES.

SIZE D — DWG. NO. 591780 — REV LTR B

THIS PRINT SUPERSEDES ALL PREVIOUS ISSUES

591780