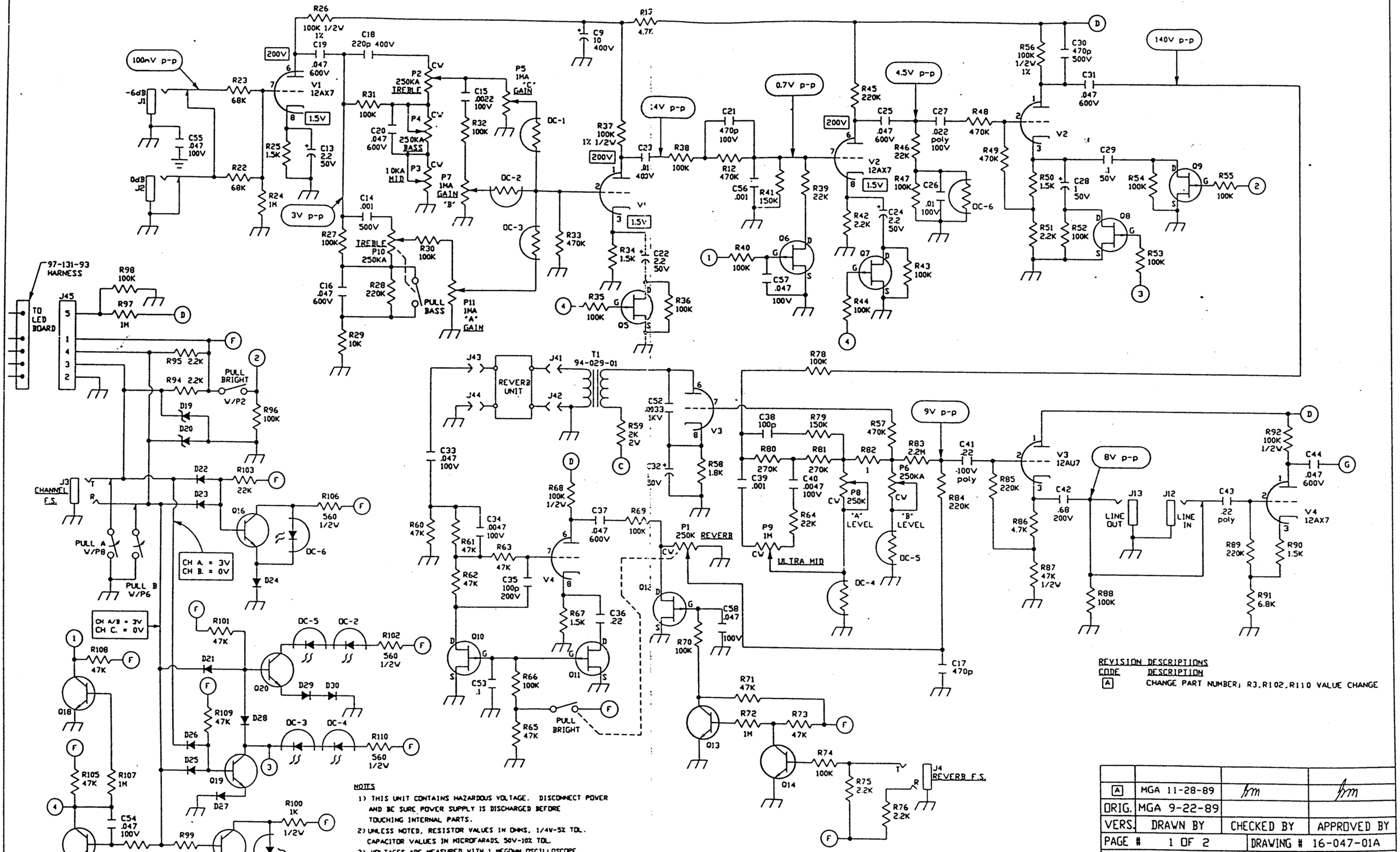

NOTES

1) THIS UNIT CONTAINS HAZARDOUS VOLTAGE. DISCONNECT POWER AND BE SURE POWER SUPPLY IS DISCHARGED BEFORE TOUCHING INTERNAL PARTS.
2) UNLESS NOTED, RESISTOR VALUES IN OHMS, 1/4W-5% TOL. CAPACITOR VALUES IN MICROFARADS, 50V-10% TOL.
3) VOLTAGES ARE MEASURED WITH 1 MEGOHM OSCILLOSCOPE AND 10 MEGOHM DIGITAL VOLTMETER.
4) CIRCUIT GROUND ⏚ CHASSIS GROUND ⏚
5) BIAS ADJUSTMENT: WITH AMP IN FULL POWER, PENTODE MODE AND NO SIGNAL APPLIED, ADJUST P14 FOR 0.10V ± .02V BETWEEN TP1 AND TP2
6) ▭ VOLTAGES, NO SIGNAL APPLIED
▭ AC SIGNAL, 1KHz, CHANNEL "C" ACC CONTROLS @ "10" EXCEPT REVERB @ "0"

CAUTION:

THIS SCHEMATIC IS PROVIDED FOR USE BY QUALIFIED PERSONNEL. TO AVOID RISK OF ELECTRIC SHOCK, REFER SERVICING TO QUALIFIED SERVICE PERSONNEL. DO NOT PERFORM ANY SERVICING BEYOND THAT EXPLAINED IN THE OPERATING INSTRUCTIONS.

REVISION DESCRIPTIONS

CODE	DESCRIPTION
A	CHANGE PART NUMBER; R3,R102,R110 VALUE CHANGE

A	MGA 11-28-89	km	km
ORIG.	MGA 9-22-89		
VERS.	DRAWN BY	CHECKED BY	APPROVED BY
PAGE # 1 OF 2		DRAWING # 16-047-01A	

DESCRIPTION: VT-120 SCHEMATIC

SLM ELECTRONICS
11880 BORMAN DR.
ST. LOUIS, MO 63146

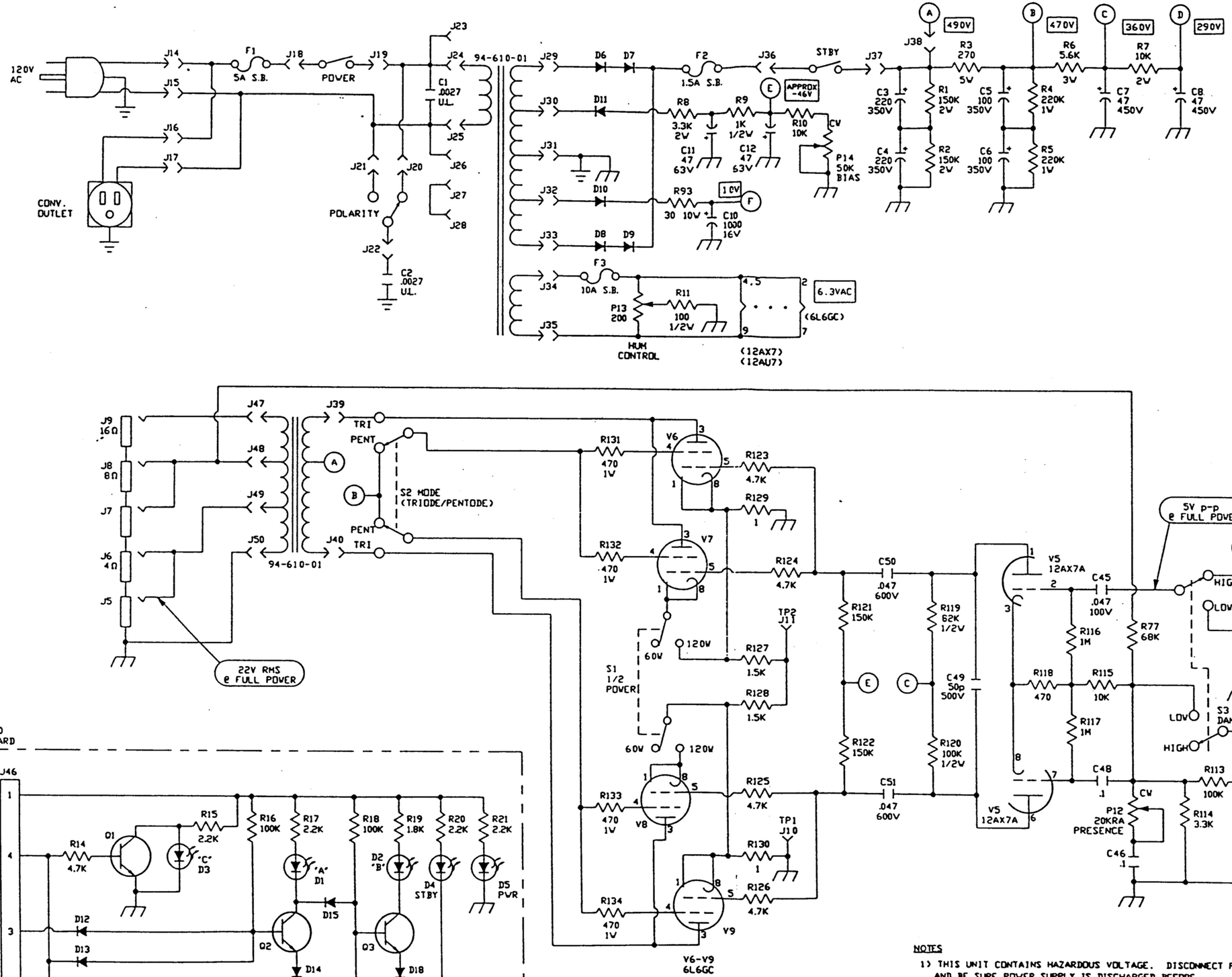

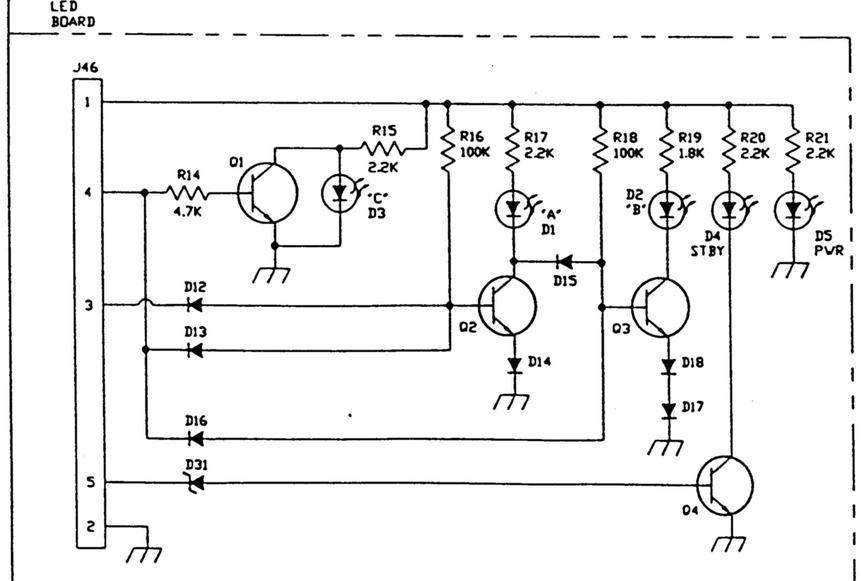

PARTS LIST 07-226-01 PART	DESCRIPTION	PART NUMBER
P1-P2	250KA W/SW	70-254-25
P3	10KA	70-103-22
P4	250KA	70-254-22
P5,P7,P9,P11	1MA	70-105-22
P6,P8,P10	250KA W/SW	70-254-25
P12	20KRA	70-203-23
P13	200 OHM TRIM	71-201-11
P14	50K TRIM	71-503-11
D1,D5	RED LED	21-501-01
D2	YELLOW LED	21-503-01
D3,4	GREEN LED	21-502-01
D6-9	1N5398	21A598-01
D10,11	1N4002	21A402-01
D12-18	1N914	21A914-01
D19,20	1N746	21A146-01
D21-30	1N914	21A914-01
D31	1N4747	21A447-01
Q1-4	2N5210	96-510-01
Q5-12	J176	96-176-01
Q13-20	2N5210	96-510-01
DC1-3,DC6	VTL-5C3	66-101-01
DC4,5	VTL-5C1	66-104-01
V1	12AX7A HI TEST	97-927-02 [A]
V2	12AX7A	97-927-01 [A]
V3	12AU7A	95-126-01
V4,V5	12AX7A	97-927-01 [A]
V6-9	6L6GC	95-616-01
J1,2	1/4" JACK	39-119-01
J3,4	1/4" JACK	39-117-01
J5-9	1/4" JACK	39-116-01
J10,11	PIN JACK	39-403-01
J12,13	1/4" JACK	39-116-01
J14-19	.250" TAB	17-836-01
J20,J22,J25	.187" TAB	17-894-01
J21	.250" TAB	17-836-01
J23-24	.250" TAB	17-836-01
J26-40	.250" TAB	17-836-01
J41-44	.187"	17-894-01
J45,46	5 PIN HEADER	17-310-05
J47-50	.250" TAB	17-836-01
J51-55	9 PIN SOCKET	17-450-09
J56-59	8 PIN SOCKET	17-450-08
S1,2	DPDT SLIDE	88-202-01
S3	DPDT P.B.	88-302-01
F1	5A SB	23-305-05
F2	1.5 A SB	23-308-05
F3	10 A SB	23-310-05

REVISION DESCRIPTIONS

CODE	DESCRIPTION
[A]	MOVE PC BOARD MOUNTING HOLES

CAUTION:

THIS SCHEMATIC IS PROVIDED FOR USE BY QUALIFIED PERSONNEL. TO AVOID RISK OF ELECTRIC SHOCK, REFER SERVICING TO QUALIFIED SERVICE PERSONNEL. DO NOT PERFORM ANY SERVICING BEYOND THAT EXPLAINED IN THE OPERATING INSTRUCTIONS.

NOTES

1) THIS UNIT CONTAINS HAZARDOUS VOLTAGE. DISCONNECT POWER AND BE SURE POWER SUPPLY IS DISCHARGED BEFORE TOUCHING INTERNAL PARTS.
2) UNLESS NOTED, RESISTOR VALUES IN OHMS, 1/4W-5% TOL. CAPACITOR VALUES IN MICROFARADS, 50V-10% TOL.
3) VOLTAGES ARE MEASURED WITH 1 MEGOHM OSCILLOSCOPE AND 10 MEGOHM DIGITAL VOLTMETER.
4) CIRCUIT GROUND ⏚ CHASSIS GROUND ⏚
5) BIAS ADJUSTMENT: WITH AMP IN PENTODE MODE AND NO SIGNAL APPLIED, ADJUST P14 FOR 0.10V ± .02V BETWEEN TP1 AND TP2
6) [ ] VOLTAGES, NO SIGNAL APPLIED
( ) AC SIGNAL, 1KHz, CHANNEL "C" ALL CONTROLS @ "10" EXCEPT REVERB @ "0"

[A]	MGA 11-28-89		
ORIG.	MGA 9-22-89		
VERS.	DRAWN BY	CHECKED BY	APPROVED BY
PAGE #	2 OF 2	DRAWING #	16-04701A

DESCRIPTION: VT-120 SCHEMATIC

SLM ELECTRONICS
11880 BORMAN DR.
ST. LOUIS, MO 63146