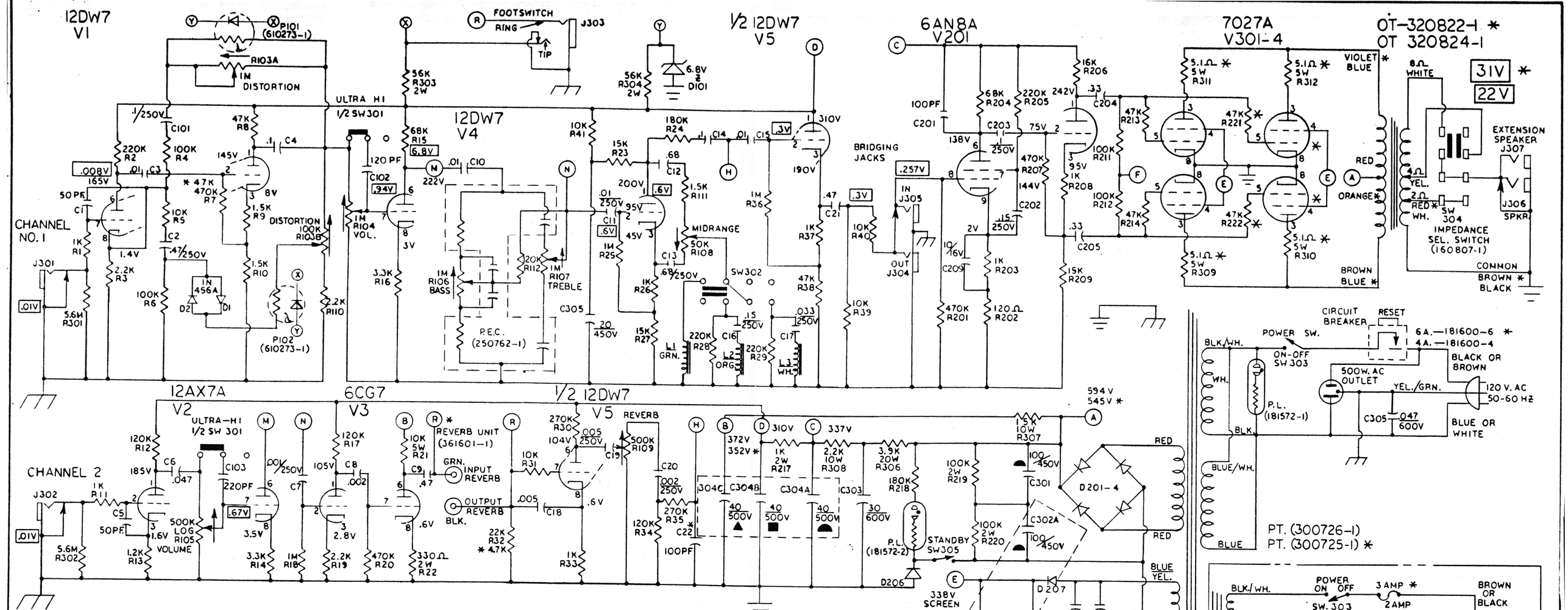

NOTES:

1. ALL RESISTORS IN OHMS 1/2W 10% UNLESS OTHERWISE SPECIFIED.
2. ALL CAPACITORS IN MFD. AND 400V UNLESS OTHERWISE SPECIFIED.
3. D.C. VOLTAGE READINGS WITH NO SIGNAL APPLIED USING A 20,000 OHM PER VOLT VOLTMETER.
4. NUMBERS IN PARENTHESIS REFER TO MAGNAVOX PART NUMBER.
5. D.C. VOLTAGE READINGS ARE POSITIVE WITH RESPECT TO CHASSIS GROUND UNLESS OTHERWISE SPECIFIED.
6. THE TWO 7027 OUTPUT TUBES MAY BE REPLACED WITH 6550 TUBES AT THE CUSTOMER'S OPTION FOR IMPROVED PERFORMANCE.
7. DO NOT OPERATE AMPLIFIER WITH EITHER OPTOISOLATOR P101 OR P102 REMOVED FROM CIRCUIT AS DAMAGE WILL RESULT TO REMAINING DEVICE.
8. A.C. VOLTAGES ARE NOTED WITHIN BOXES.
9. CIRCUIT OF CHASSIS MAY VARY SLIGHTLY FROM THAT SHOWN HERE DUE TO NORMAL PRODUCTION CHANGES.

* PARTS INDICATED WITH ASTERISK ARE USED ON V4 AND VT22 MODELS ONLY.

PARTS LIST:

SWITCHES	SW 303 & 305	160804-10
SWITCH	SW 302	160805-7
SWITCH	SW 301	160805-6
CONTROL	R103	220668-1
CONTROL	R104, 106, 107	220663-18
CONTROL	R105	220663-17
CONTROL	R108	220663-15
CONTROL	R109	220663-16
INDUCTOR	L1 (800 MH)	361604-3 GREEN
INDUCTOR	L2 (300 MH)	361604-2 ORANGE
INDUCTOR	L3 (100 MH)	361604-1 WHITE
DIODES	D201-208	ALL (1 AMP 1000V) 530555-2

SIZE	PART NO.
5 3/16" x 8"	591761-3
5 3/16" x 8"	591761-2
7" x 10 13/16"	591761-1

REVISIONS	
A	RELEASED AM-1447 2-10-76
B	REMOVED RESISTORS FROM PIN 8 OF REV. R208 TO R308, R219 TO R308, R220 TO R307, R217 TO R218, R218 TO R306, R307 TO R219, R306 TO R307, R219 TO R220, R220 TO R219, R307 TO R306, SPCS. REV. TY. PARALLEL W/ AMP MAT. OUTPUT CH. WIRING - PLACED BEFORE CIRCUIT BRK. 6 AMP FUSE ADDED TO PRIMARY FREAMP BOARD. 1.5 AMP FUSE ADDED TO BIAS. 15 AMP FUSE ADDED TO CONNECTED IN PARALLEL CONN. CHANGED FROM ADDED @ D-3, 1 F-3. WIRING CHANGE. CHASSIS 8Ω CHANGE 8 BLK/YELLOW. BIT. AMP JACK WIRE DELETED. ECN-2500 3-12-76
C	REVISED PINS 5-M&S-L. C207 SEPARATED FROM CAPACITOR. ADDED 1.5 AMP FUSE @ 5-N FOR V4 & VT22 VERSIONS. DELETED CAP. C206 @ 5-T. ADDED C221 TO C201, R224 TO R201, R225 TO R221. REVISE R201 REDUCTION SIZE & ADDED GR. 2. ECN-2577 3-25-76
D	CHANGED C103 CAP. FROM 120 PF TO 220 PF @ C6. CHANGED C106 FROM .001 TO 120 PF @ D3. R17 RESISTOR NOW 47K FOR V4 & VT22 MODELS. R33 RESISTOR, V4 & VT22 MODELS 4.7K. ADDED 4.7K RESISTOR @ F6. ADDED ALTERNATE 6.25 AMP SLO-BLO FUSE FOR V4 & VT22 MODELS. ADDED (4) 47 CAP. @ N7. ADDED (4) R3 TO P9. ECN-2563 4-27-76

ADDITIONAL SPECIFICATIONS	MATERIAL
	FINISH

— TOLERANCES —
UNLESS OTHERWISE SPECIFIED

DECIMALS	± TOL.	FRACTIONS	± TOL.
.X	.030	UP TO 6	1/64
.XX	.020	6 TO 24	1/32
.XXX	.010	ABOVE 24	1/16

THREADS - CLASS 2 FIT AFTER PLATING — CONCENTRICITY .010 T.I.R.
MACHINE FINISHES 64 MICRO INCH MAX. — ANGULAR TOL. ± 1/2°
DIMENSIONS IN INCHES UNLESS OTHERWISE SPECIFIED ON DRAWING.
DO NOT SCALE DRAWING

THE AMPEG COMPANY
DIVISION OF THE MAGNAVOX COMPANY
P.O. BOX 515 LINDEN, N.J. 07036

SCHEMATIC V2 & VT40
(DISTORTION) V4 & VT22

	SIGNATURE	DATE	
DR.	L. STROUD	2-6-76	FIRST USED IN ASSEMBLY
CHK.			FIRST MADE FOR
ENG.	Robert Hackel	2-9-76	SCALE

THIS MATERIAL IS THE PROPERTY OF, AND PROPRIETARY TO, THE MAGNAVOX COMPANY AND IS NOT TO BE DISCLOSED TO OTHERS OR USED FOR OTHER THAN AUTHORIZED MAGNAVOX PURPOSES WITHOUT THE WRITTEN PERMISSION OF THE MAGNAVOX COMPANY. THIS MATERIAL MUST BE RETURNED TO THE MAGNAVOX COMPANY WHEN THE HOLDER NO LONGER REQUIRES ITS USE FOR AUTHORIZED MAGNAVOX PURPOSES.

SIZE D — DWG. NO. 591761

DWG. NO. 591761