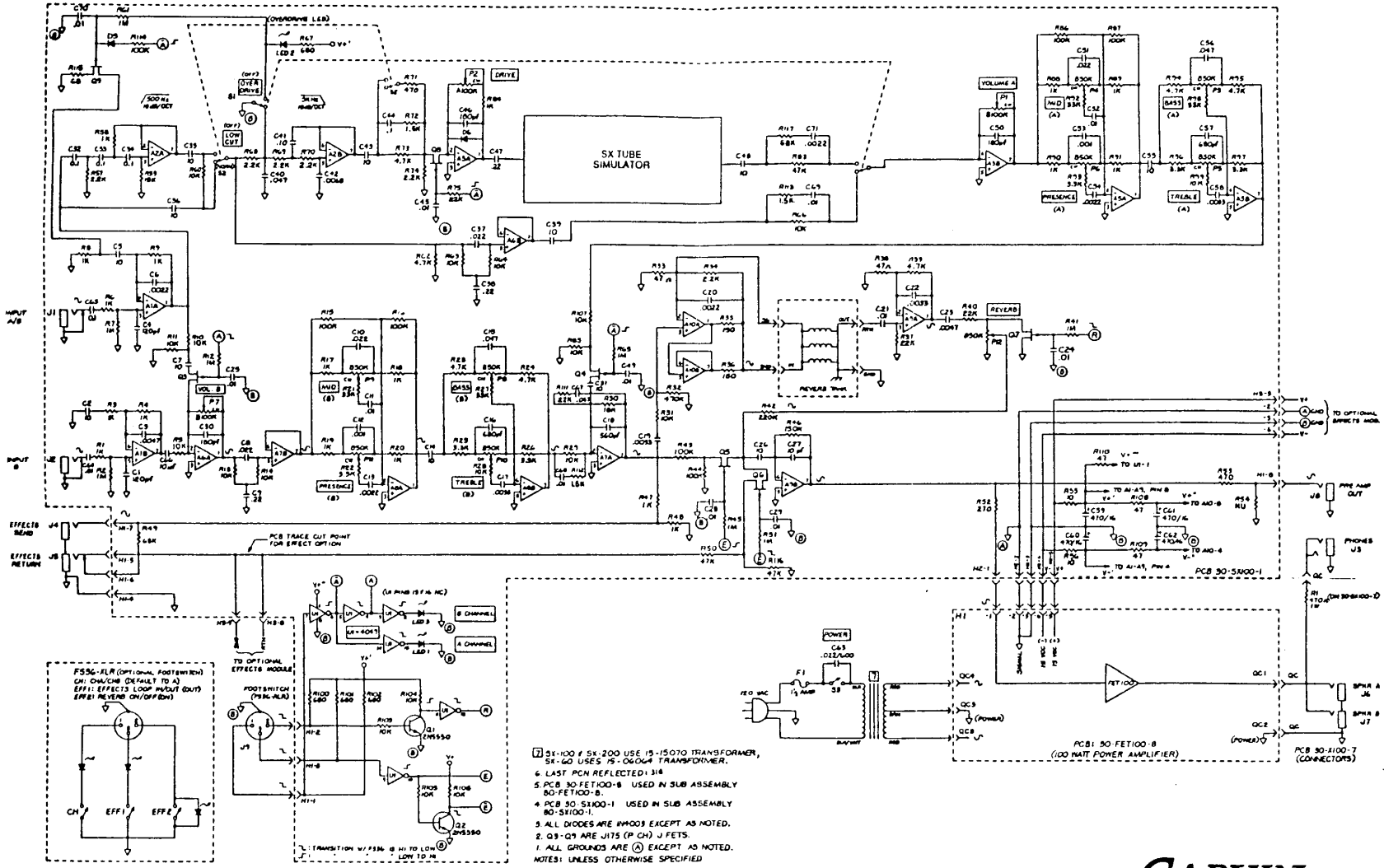

CARVIN

SCHEMATIC
PRE-AMP
Section of SX Series