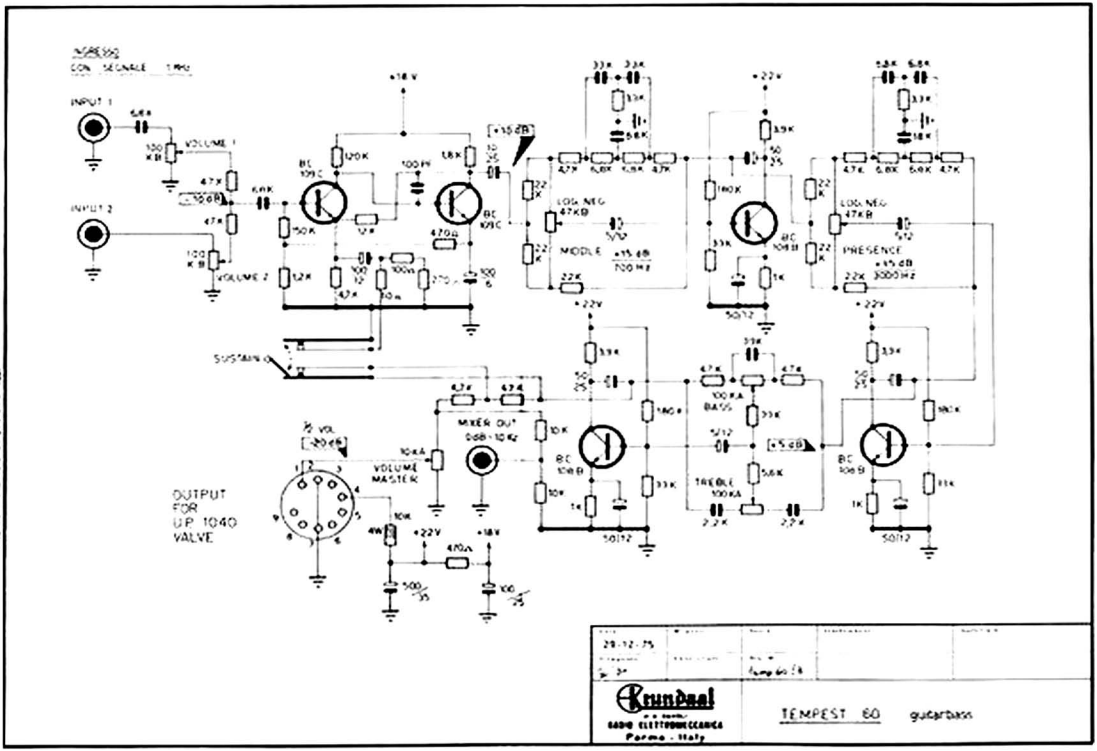
INGRESSO
CON SEGNALE 1 MHz
INPUT 1
INPUT 2
VOLUME 1
VOLUME 2
BC 109C
BC 108B
+18 V
+22V
+15 dB
LOG. NEG. 47KB
MIDDLE
PRESENCE
+15 dB 3000 Hz
SUSTAIN
MIXER OUT 0dB-10 Hz
VOLUME MASTER
½ VOL -20 dB
BASS
TREBLE 100KA
+5 dB
OUTPUT FOR U.P. 1040 VALVE
29-12-75
Krundaal
RADIO ELETTROMECCANICA
Parma - Italy
TEMPEST 60
guitarbass