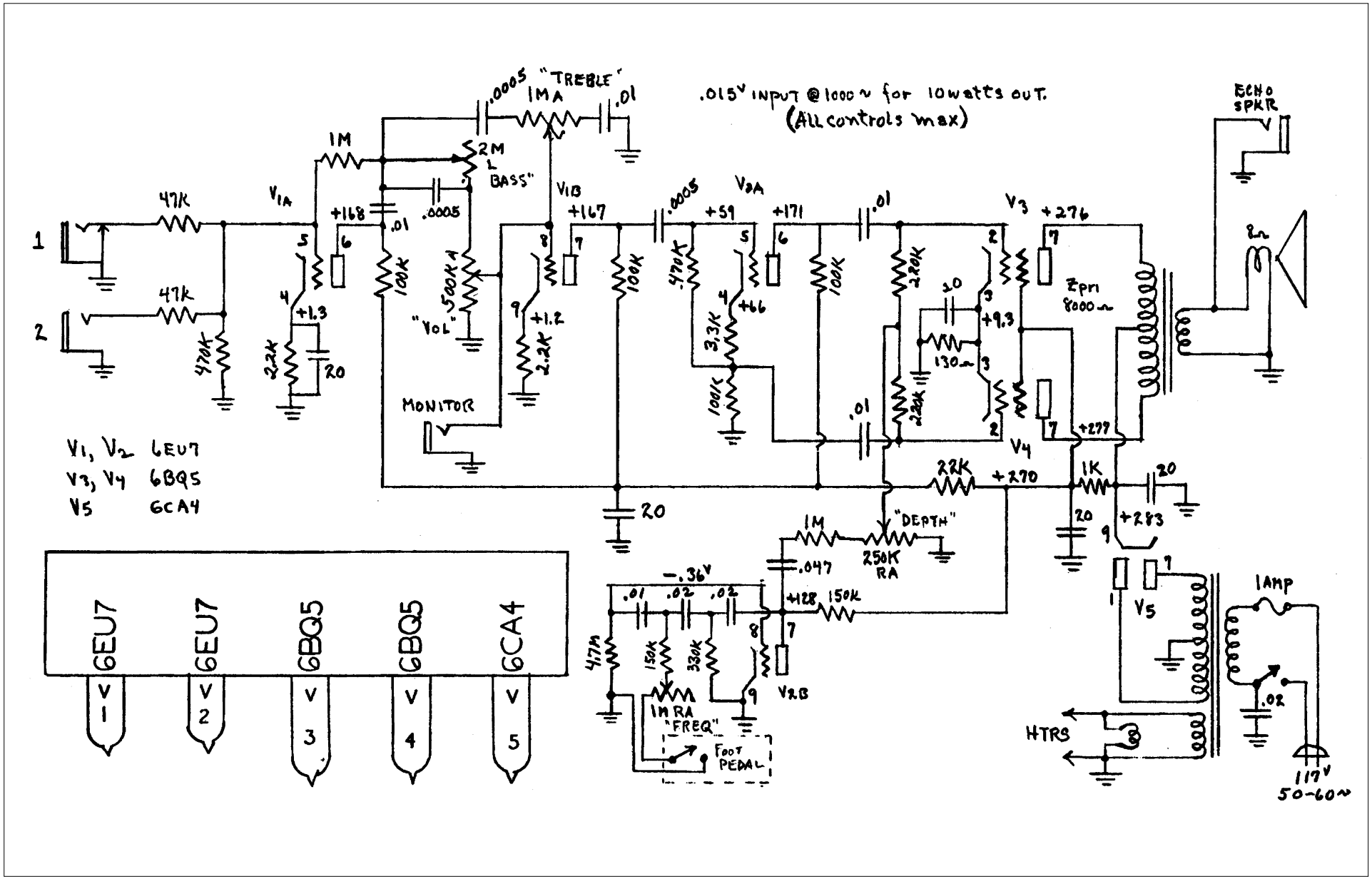
.015V INPUT @ 1000~ for 10watts OUT.
(All controls max)
"TREBLE"
1MA
.0005
.01
1M
2M
"BASS"
47K
V1A
+168
.01
.0005
V1B
+167
.0005
V2A
+59
+171
.01
V3
+276
ECHO SPKR
8Ω
Zpri 8000Ω
100K
500K
"VOL"
+1.3
+1.2
2.2K
20
470K
MONITOR
+66
3.3K
100K
220K
20
130Ω
+9.3
V4
+277
22K
+270
1K
+283
V1, V2 6EU7
V3, V4 6BQ5
V5 6CA4
"DEPTH"
250K RA
1M
.047
-.36V
.01
.02
+128
150K
4.7M
330K
V2B
1M RA
"FREQ"
FOOT PEDAL
V5
1AMP
HTRS
117V 50-60~
6EU7
6EU7
6BQ5
6BQ5
6CA4
V 1
V 2
V 3
V 4
V 5