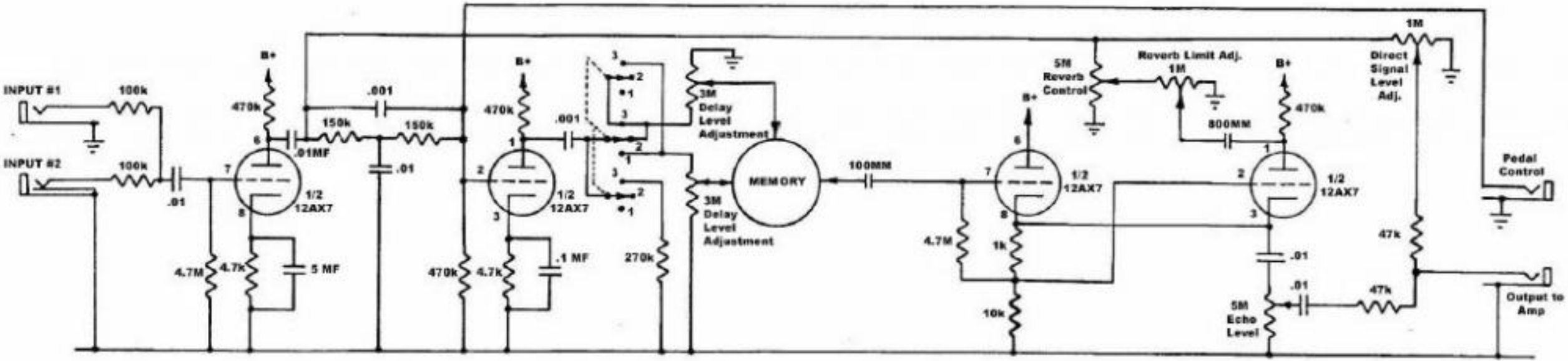

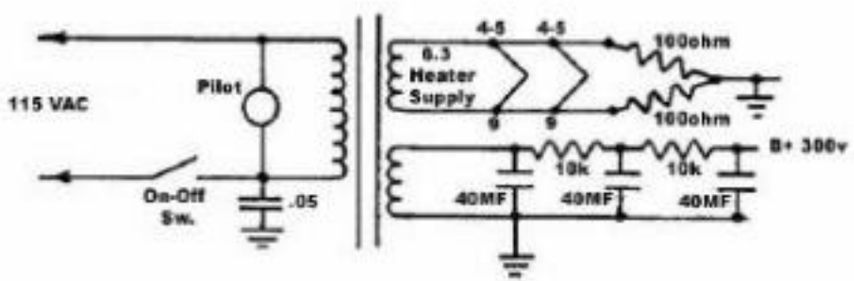

Fender

ECHO-REVERB III