ZONE	REV.	DESCRIPTION	DATE	APPROVED
	A	RELEASED PR#85	8-23-88	
	B	EC #334	10-21-88	
	C	EC #378	11-18-88	
	D	ECO L01612	11-28-88	

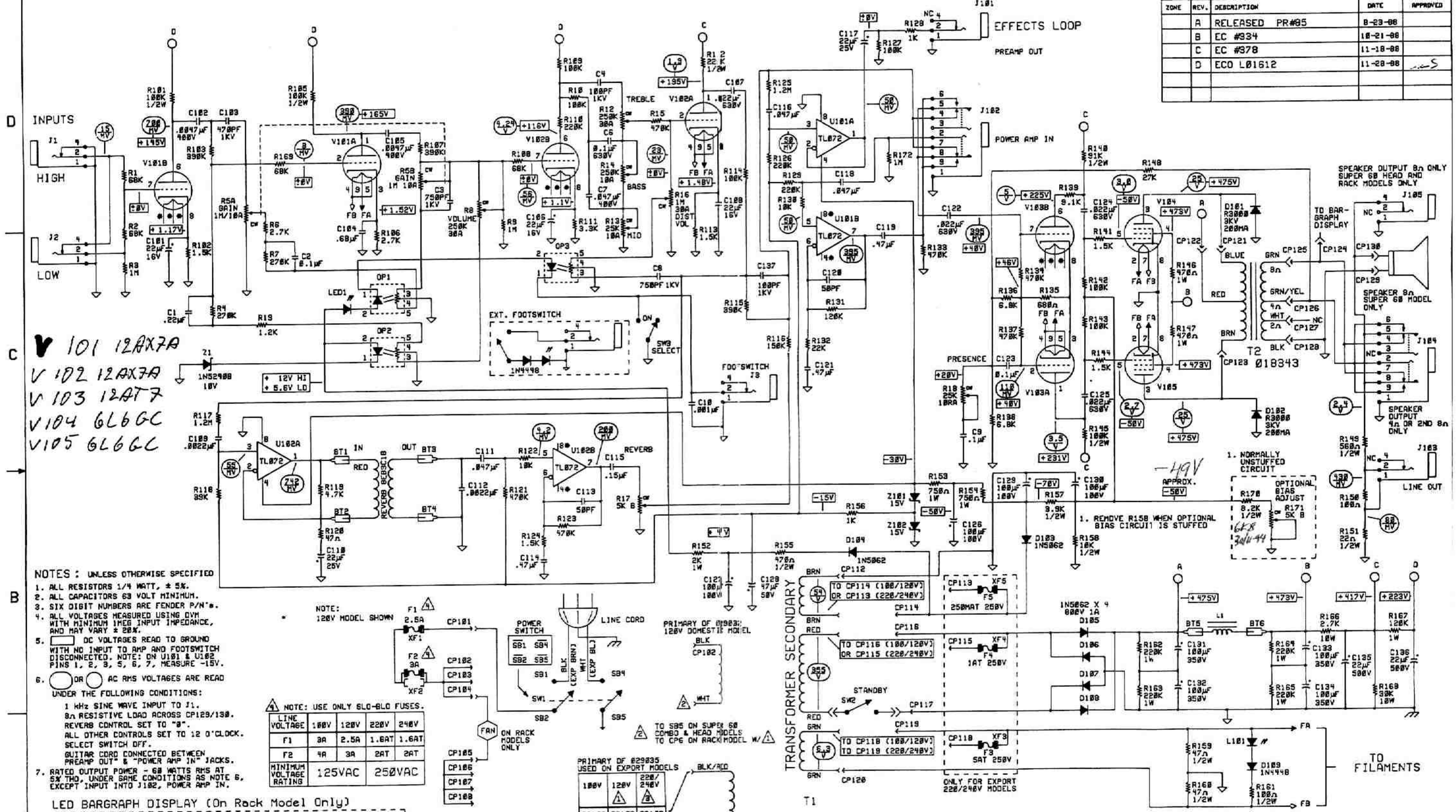

V 101 12AX7A
V 102 12AX7A
V 103 12AT7
V104 6L6GC
V105 6L6GC

NOTES : UNLESS OTHERWISE SPECIFIED

1. ALL RESISTORS 1/4 WATT, ± 5%.
2. ALL CAPACITORS 63 VOLT MINIMUM.
3. SIX DIGIT NUMBERS ARE FENDER P/N's.
4. ALL VOLTAGES MEASURED USING DVM WITH MINIMUM 1MEG INPUT IMPEDANCE, AND MAY VARY ± 20%.
5. ▭ DC VOLTAGES READ TO GROUND WITH NO INPUT TO AMP AND FOOTSWITCH DISCONNECTED. NOTE: ON U101 & U102 PINS 1, 2, 3, 5, 6, 7, MEASURE -15V.
6. ◯ OR ◯ AC RMS VOLTAGES ARE READ UNDER THE FOLLOWING CONDITIONS:
   1 kHz SINE WAVE INPUT TO J1.
   8Ω RESISTIVE LOAD ACROSS CP129/130.
   REVERB CONTROL SET TO "0".
   ALL OTHER CONTROLS SET TO 12 O'CLOCK.
   SELECT SWITCH OFF.
   GUITAR CORD CONNECTED BETWEEN PREAMP OUT" & "POWER AMP IN" JACKS.
7. RATED OUTPUT POWER - 60 WATTS RMS AT 5% THD, UNDER SAME CONDITIONS AS NOTE 6, EXCEPT INPUT INTO J102, POWER AMP IN.

4 NOTE: USE ONLY SLO-BLO FUSES.

LINE VOLTAGE	100V	120V	220V	240V
F1	3A	2.5A	1.6AT	1.6AT
F2	4A	3A	2AT	2AT
MINIMUM VOLTAGE RATING	125VAC		250VAC	

REF. DES.	ITEM	QTY
DATABASE FILE: SB0_01		
CHECKED BY:		
DATE:		
APPROVED:		
DATE:		
TOLERANCES: X.X ±0.050" X.XX ±0.010" X.XXX ±0.005" ANGLES ±0.500°		

PART NO. PROPRIETARY

THIS DRAWING DOCUMENT CONTAINS INFORMATION WHICH IS PROPRIETARY TO AND IS THE PROPERTY OF THE FENDER MUSICAL INSTRUMENTS CO. AND MAY NOT BE USED, REPRODUCED OR DISCLOSED IN ANY MANNER WITHOUT THE EXPRESSED WRITTEN CONSENT FROM: FENDER MUSICAL INSTRUMENTS CO. 1130 COLUMBIA ST. BREA, CALIFORNIA 92621

NEXT HIGHER ASSEMBLY: SUPER 60, SUPER RACK, SUPER 60 HEAD

DESCRIPTION

Fender MUSICAL INSTRUMENTS
1130 Columbia Street
Brea, Ca. 92621

TITLE: SCHEMATIC DIAGRAM OF 60 SERIES TUBE AMPS.

SIZE D | DRAWN: C.LINSKENS | ENGR: C.KOBYLARZ | DCS: M.WENTLING | DRAWING NUMBER 028921 | REV. D

SCALE: | DATE: 8-23-88 | SHEET 1 OF 1