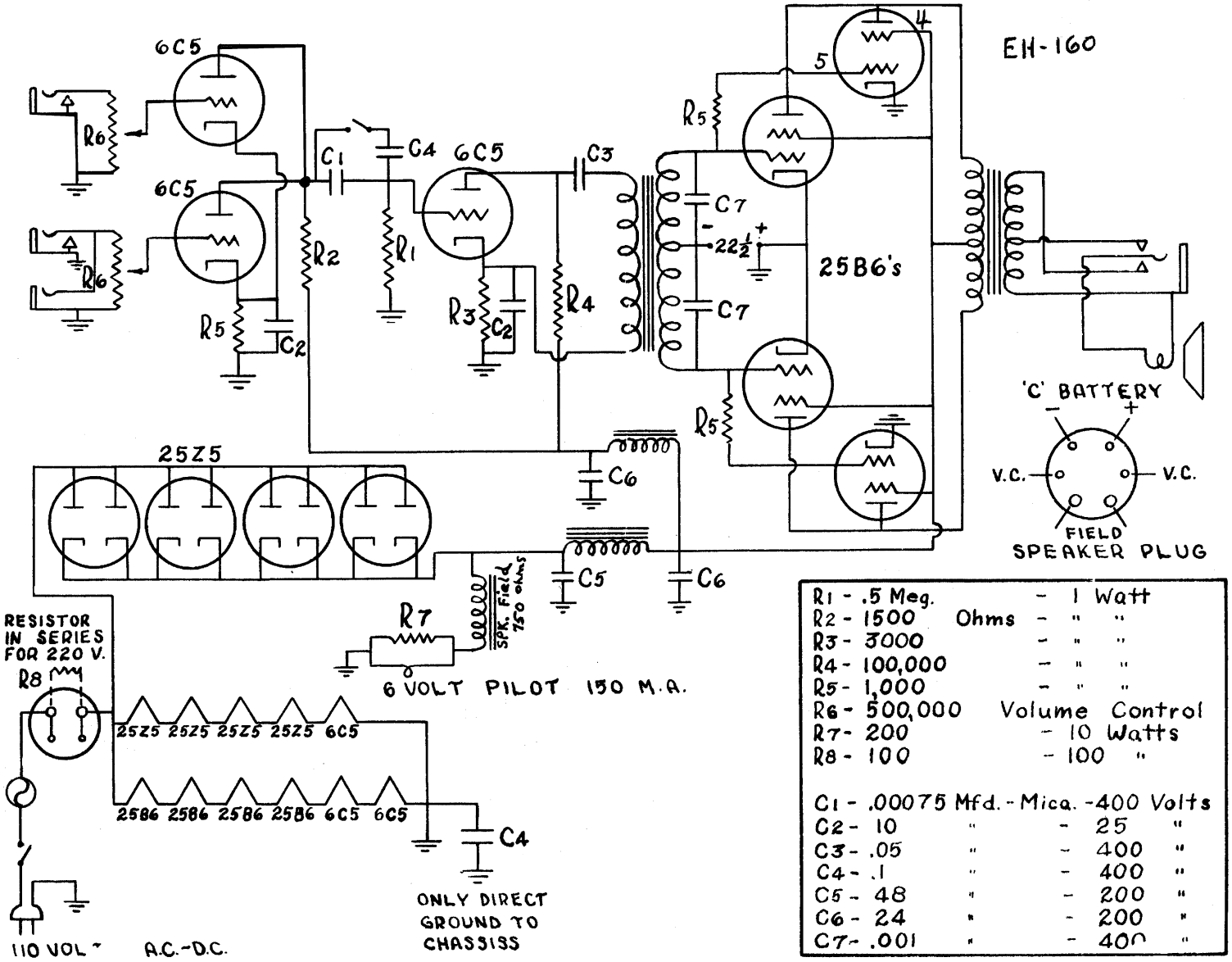

R1 - .5 Meg.		- 1 Watt	
R2 - 1500	Ohms	- "	"
R3 - 3000		- "	"
R4 - 100,000		- "	"
R5 - 1,000		- "	"
R6 - 500,000		Volume Control	
R7 - 200		- 10 Watts	
R8 - 100		- 100 "	
C1 - .00075 Mfd.	- Mica.	-400 Volts	
C2 - 10	"	- 25	"
C3 - .05	"	- 400	"
C4 - .1	"	- 400	"
C5 - 48	"	- 200	"
C6 - 24	"	- 200	"
C7 - .001	"	- 400	"