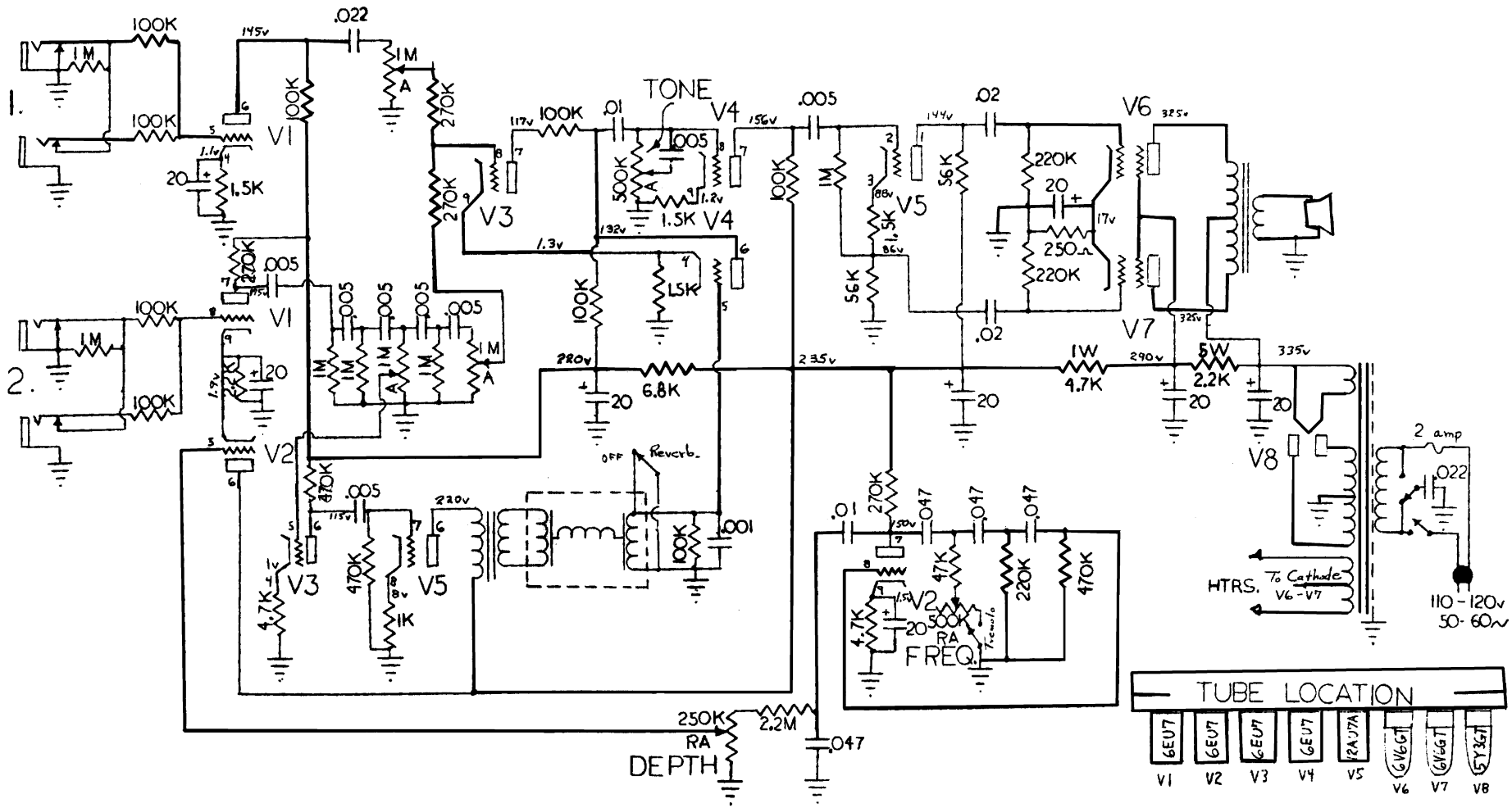
1.
2.
100K
1M
V1
V2
V3
V4
V5
V6
V7
V8
TONE
Reverb.
OFF
FREQ.
DEPTH
250K
RA
2.2M
.047
.022
.01
.005
.02
.001
6.8K
4.7K
1W
5W
2.2K
2 amp
HTRS.
To Cathode V6-V7
110-120v
50-60~
TUBE LOCATION
6EU7
12AU7A
6V6GT
5Y3GT