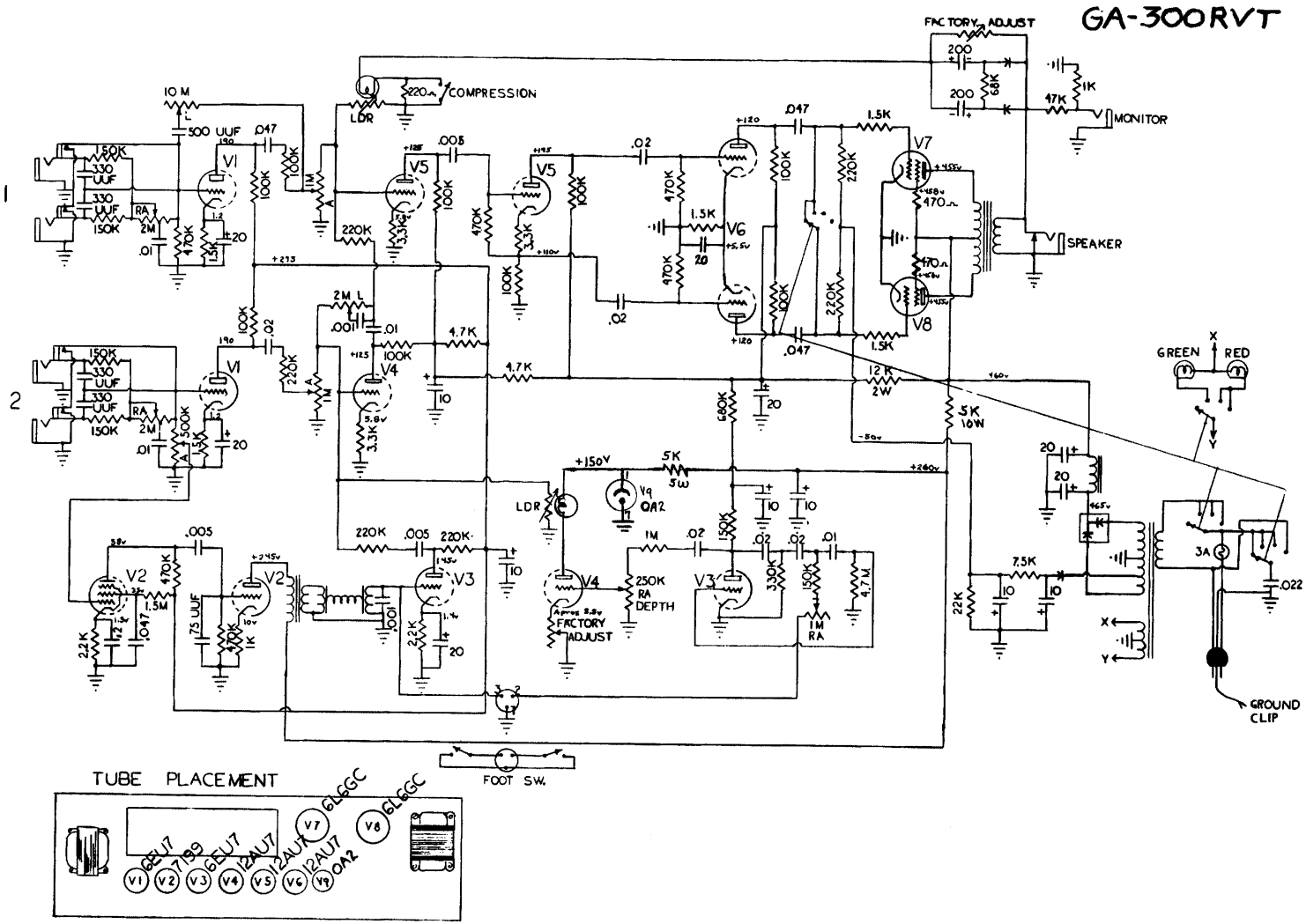

FUSE

The fuse used in this Amplifier is a type 3AG of three amperes rating.

DO NOT USE FUSES OF HIGHER RATING

SERVICE

If the amplifier is in need of servicing, it should be taken to a reliable radio man. The electrical diagram in this folder should be shown the repairman to assist him in servicing the amplifier.