GD/ 08.11. 99

SERVICE DOCUMENTATION

Hughes & Kettner®
TECHNOLOGY OF TONE

Triamp

GD/ 08.11. 99

Inhaltsverzeichnis/ Contents

1 Schaltpläne/ schematic diagrams

2 Bestückungspläne/ component parts

3 Bestellnummern/ order no.

4 Bestellinformationen/ ordering informations

5 Technische Daten/ technical data

GD/ 08.11. 99

1 Schaltpläne/ schematics

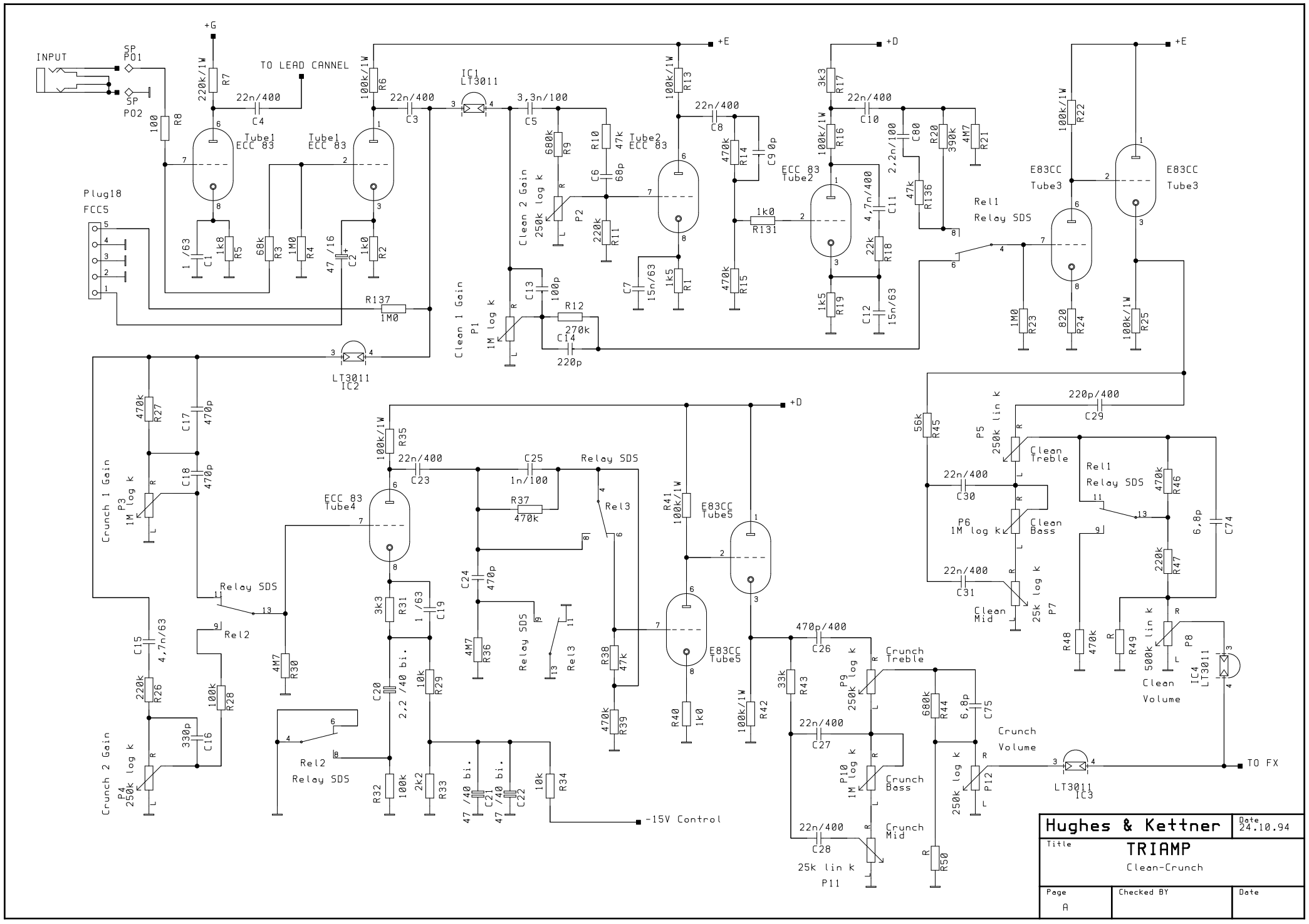
INPUT
SP P01
SP P02
+G
+E
+D
TO LEAD CANNEL
Tube1 ECC 83
Tube2 ECC 83
Tube3 E83CC
Tube4 ECC 83
Tube5 E83CC
IC1 LT3011
IC2 LT3011
IC3 LT3011
IC4 LT3011
Plug18 FCC5
Clean 1 Gain P1 1M log k
Clean 2 Gain P2 250k log k
Crunch 1 Gain P3 1M log k
Crunch 2 Gain P4 250k log k
Rel1 Relay SDS
Rel2 Relay SDS
Rel3 Relay SDS
Clean Treble P5 250k lin k
Clean Bass P6 1M log k
Clean Mid P7 25k log k
Clean Volume P8 500k lin k
Crunch Treble P9 250k log k
Crunch Bass P10 1M log k
Crunch Mid P11 25k lin k
Crunch Volume P12 250k log k
-15V Control
TO FX
Hughes & Kettner
Date 24.10.94
Title
TRIAMP
Clean-Crunch
Page A
Checked BY
Date

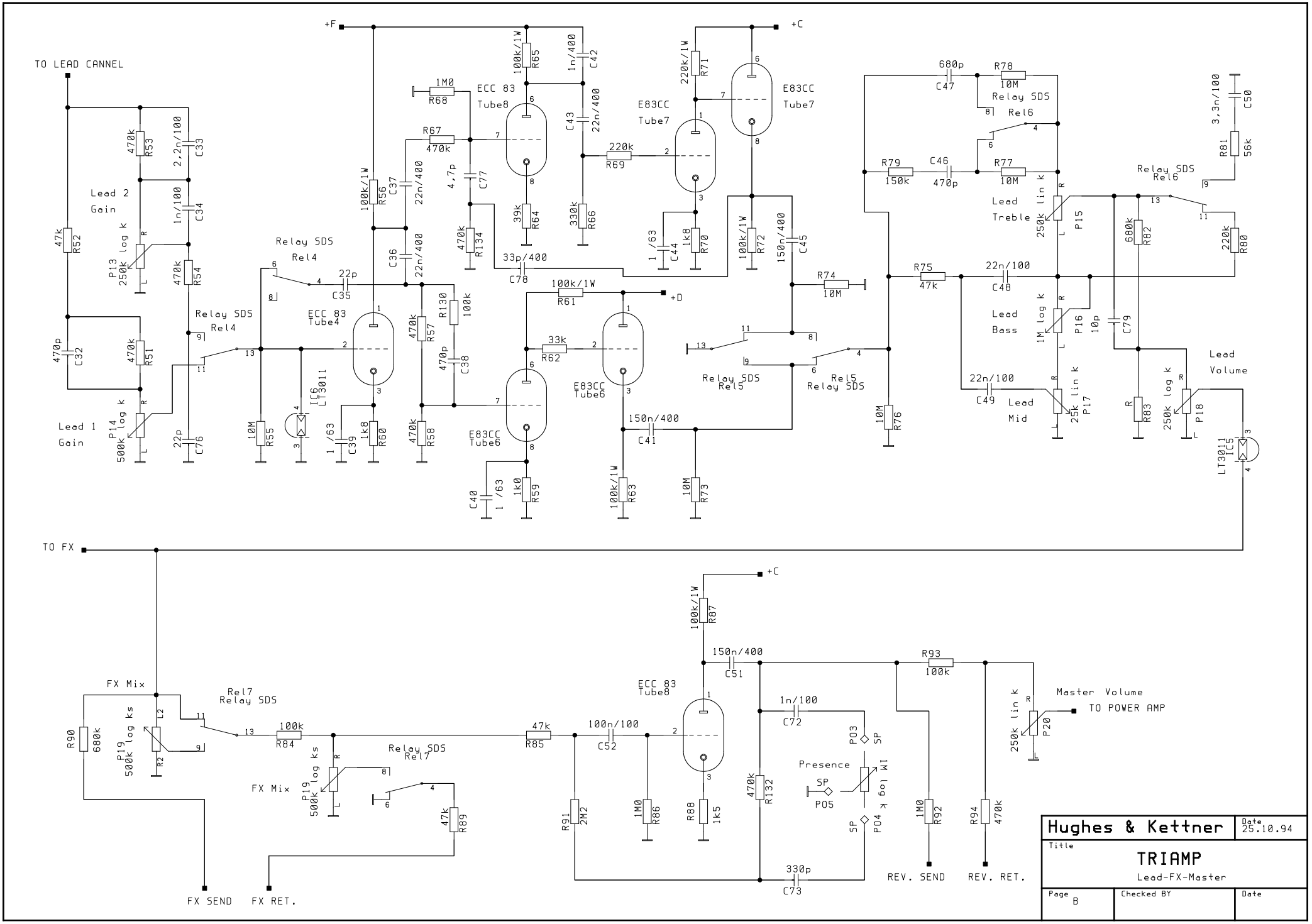
TO LEAD CANNEL
Lead 2 Gain
Lead 1 Gain
P13 250k log k
P14 500k log k
R52 47k
R53 470k
R54 470k
R51 470k
C32 470p
C33 2,2n/100
C34 1n/100
C76 22p
+F
+C
+D
ECC 83 Tube8
ECC 83 Tube4
E83CC Tube7
E83CC Tube6
Relay SDS Rel4
Relay SDS Rel5
Relay SDS Rel6
Relay SDS Rel7
IC6 LT3011
IC5 LT3011
R68 1M0
R67 470k
R65 100k/1W
R56 100k/1W
C37 22n/400
C36 22n/400
C35 22p
C77 4,7p
R134 470k
C78 33p/400
C42 1n/400
C43 22n/400
R64 39k
R66 330k
R69 220k
R71 220k/1W
R70 1k8
C44 1 /63
R72 100k/1W
C45 150n/400
R74 10M
R61 100k/1W
R62 33k
R130 100k
R57 470k
C38 470p
R55 10M
R60 1k8
C39 1 /63
R58 470k
R59 1k0
C40 1 /63
R63 100k/1W
C41 150n/400
R73 10M
R76 10M
R75 47k
C47 680p
R78 10M
R79 150k
C46 470p
R77 10M
C48 22n/100
C49 22n/100
C50 3,3n/100
R81 56k
R80 220k
R82 680k
C79 10p
R83 R
P15 250k lin k
P16 1M log k
P17 25k lin k
P18 250k log k
Lead Treble
Lead Bass
Lead Mid
Lead Volume
TO FX
FX Mix
R90 680k
P19 500k log ks
Rel7 Relay SDS
R84 100k
R85 47k
C51 150n/400
R87 100k/1W
C52 100n/100
R91 2M2
R86 1M0
R88 1k5
C72 1n/100
R132 470k
C73 330p
Presence
P03
P04
P05
SP
1M log k
R93 100k
R92 1M0
R94 470k
P20 250k lin k
Master Volume
TO POWER AMP
FX SEND
FX RET.
REV. SEND
REV. RET.
Hughes & Kettner
Date 25.10.94
Title
TRIAMP
Lead-FX-Master
Page B
Checked BY
Date

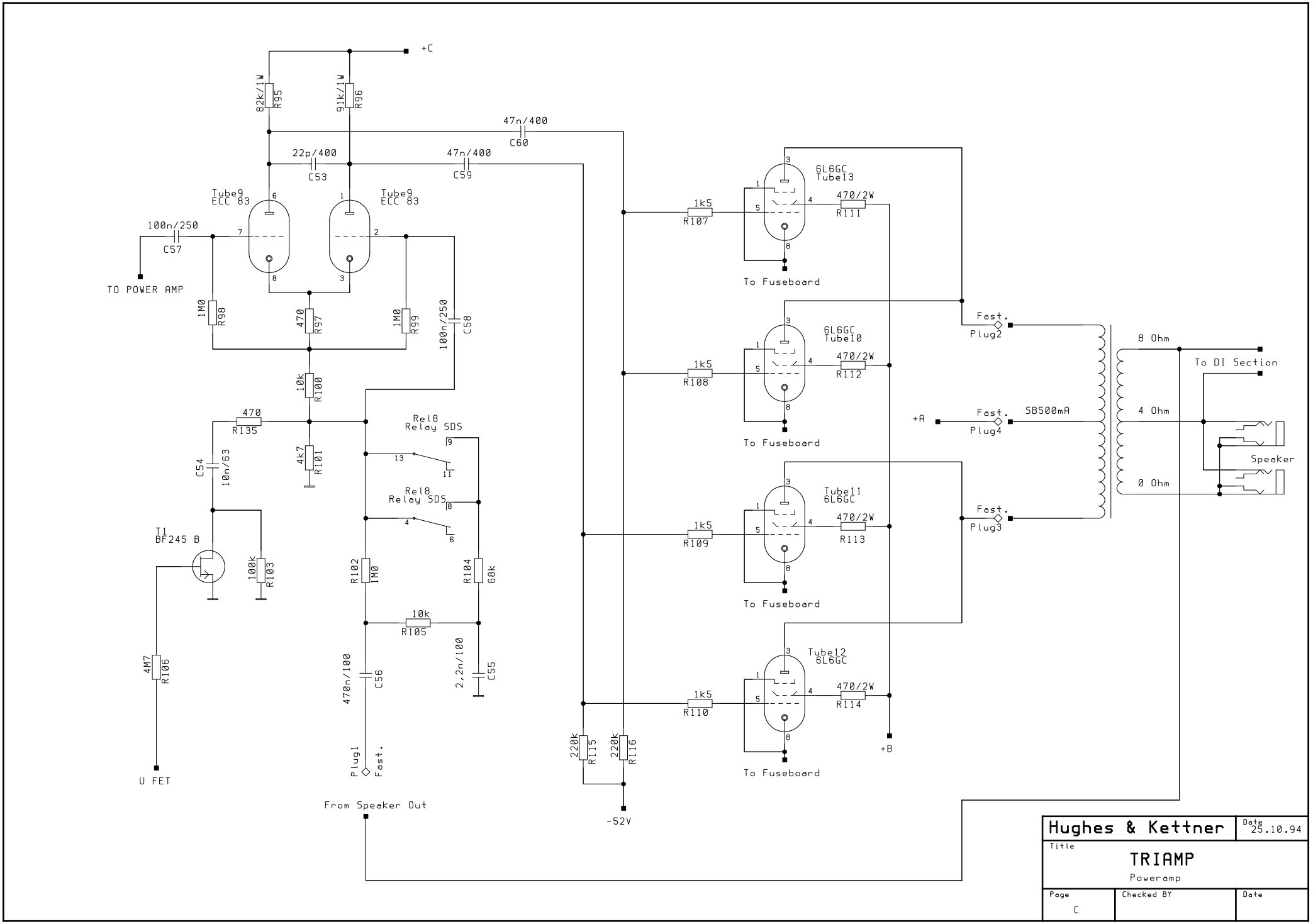
+C
82k/1W R95
91k/1W R96
47n/400 C60
22p/400 C53
47n/400 C59
Tube9 ECC 83
Tube9 ECC 83
100n/250 C57
TO POWER AMP
1M0 R98
470 R97
1M0 R99
100n/250 C58
10k R100
470 R135
4k7 R101
C54 10n/63
T1 BF245 B
100k R103
4M7 R106
U FET
Rel8 Relay SDS
Rel8 Relay SDS
R102 1M0
R104 68k
10k R105
470n/100 C56
2,2n/100 C55
Plug1 Fast.
From Speaker Out
220k R115
220k R116
-52V
1k5 R107
1k5 R108
1k5 R109
1k5 R110
6L6GC Tube13
6L6GC Tube10
Tube11 6L6GC
Tube12 6L6GC
470/2W R111
470/2W R112
470/2W R113
470/2W R114
To Fuseboard
To Fuseboard
To Fuseboard
To Fuseboard
+B
+A
Fast. Plug2
Fast. Plug4
Fast. Plug3
SB500mA
8 Ohm
4 Ohm
0 Ohm
To DI Section
Speaker
Hughes & Kettner
Date 25.10.94
Title
TRIAMP
Poweramp
Page C
Checked BY
Date

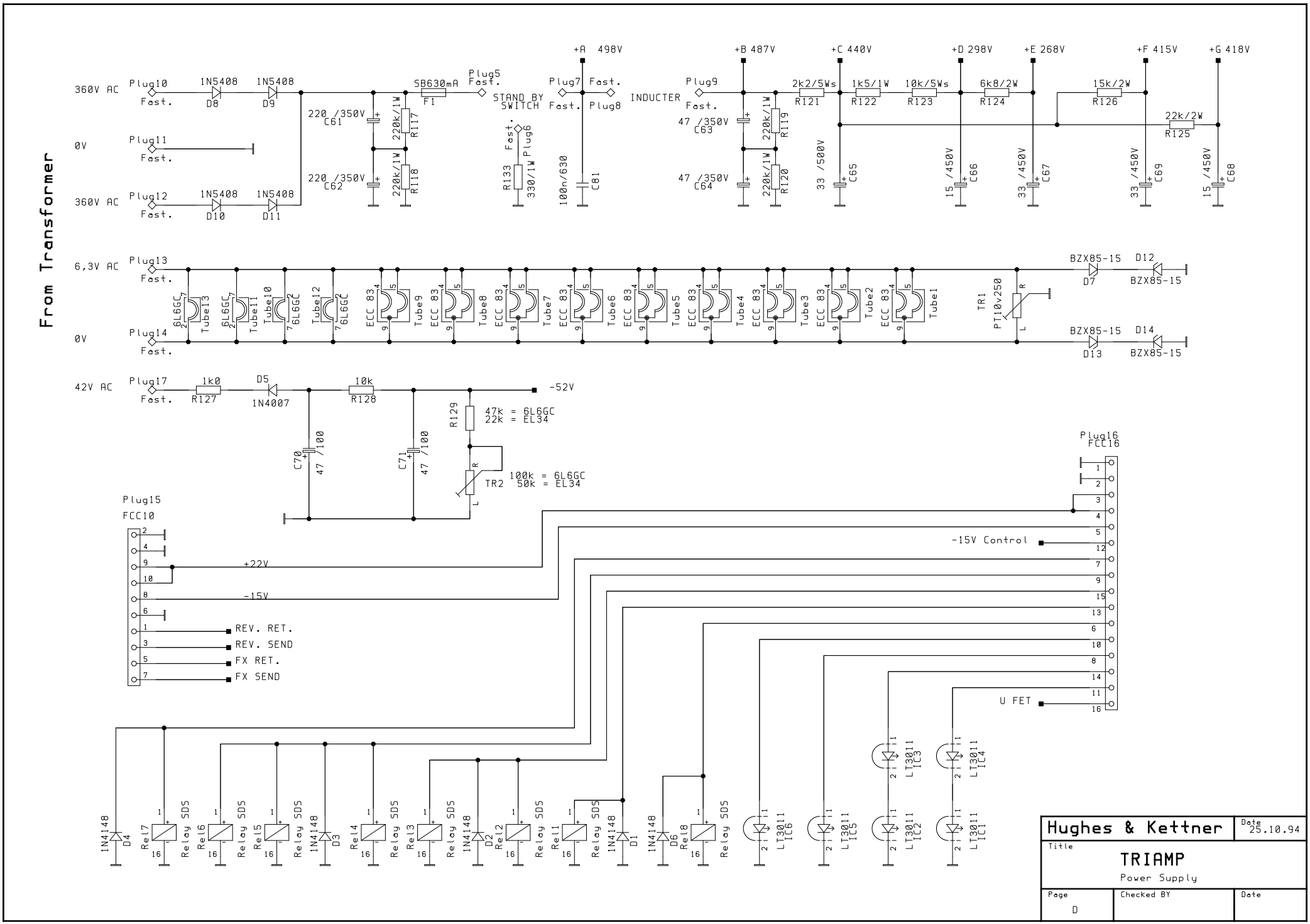
From Transformer
360V AC
0V
360V AC
6,3V AC
0V
42V AC
Plug10
Plug11
Plug12
Plug13
Plug14
Plug17
Fast.
1N5408
D8
D9
D10
D11
220 /350V
C61
C62
220k/1W
R117
R118
5B630mA
F1
Plug5
STAND BY
SWITCH
Plug6
R133
330/1W
+A 498V
Plug7
Plug8
100n/630
C81
+B 487V
+C 440V
+D 298V
+E 268V
+F 415V
+G 418V
INDUCTER
Plug9
47 /350V
C63
C64
220k/1W
R119
R120
2k2/5Ws
R121
1k5/1W
R122
10k/5Ws
R123
6k8/2W
R124
15k/2W
R126
22k/2W
R125
33 /500V
C65
15 /450V
C66
33 /450V
C67
33 /450V
C69
15 /450V
C68
6L6GC
Tube13
Tube11
Tube10
Tube12
ECC 83
Tube9
Tube8
Tube7
Tube6
Tube5
Tube4
Tube3
Tube2
Tube1
TR1
PT10v250
BZX85-15
D7
D12
D13
D14
1k0
R127
D5
1N4007
10k
R128
-52V
R129
47k = 6L6GC
22k = EL34
C70
47 /100
C71
TR2
100k = 6L6GC
50k = EL34
Plug15
FCC10
+22V
-15V
REV. RET.
REV. SEND
FX RET.
FX SEND
Plug16
FCC16
-15V Control
U FET
1N4148
D4
D3
D2
D1
D6
Rel7
Rel6
Rel5
Rel4
Rel3
Rel2
Rel1
Rel8
Relay SDS
LT3011
IC6
IC5
IC3
IC4
IC2
IC1
Hughes & Kettner
Date
25.10.94
Title
TRIAMP
Power Supply
Page
D
Checked BY
Date

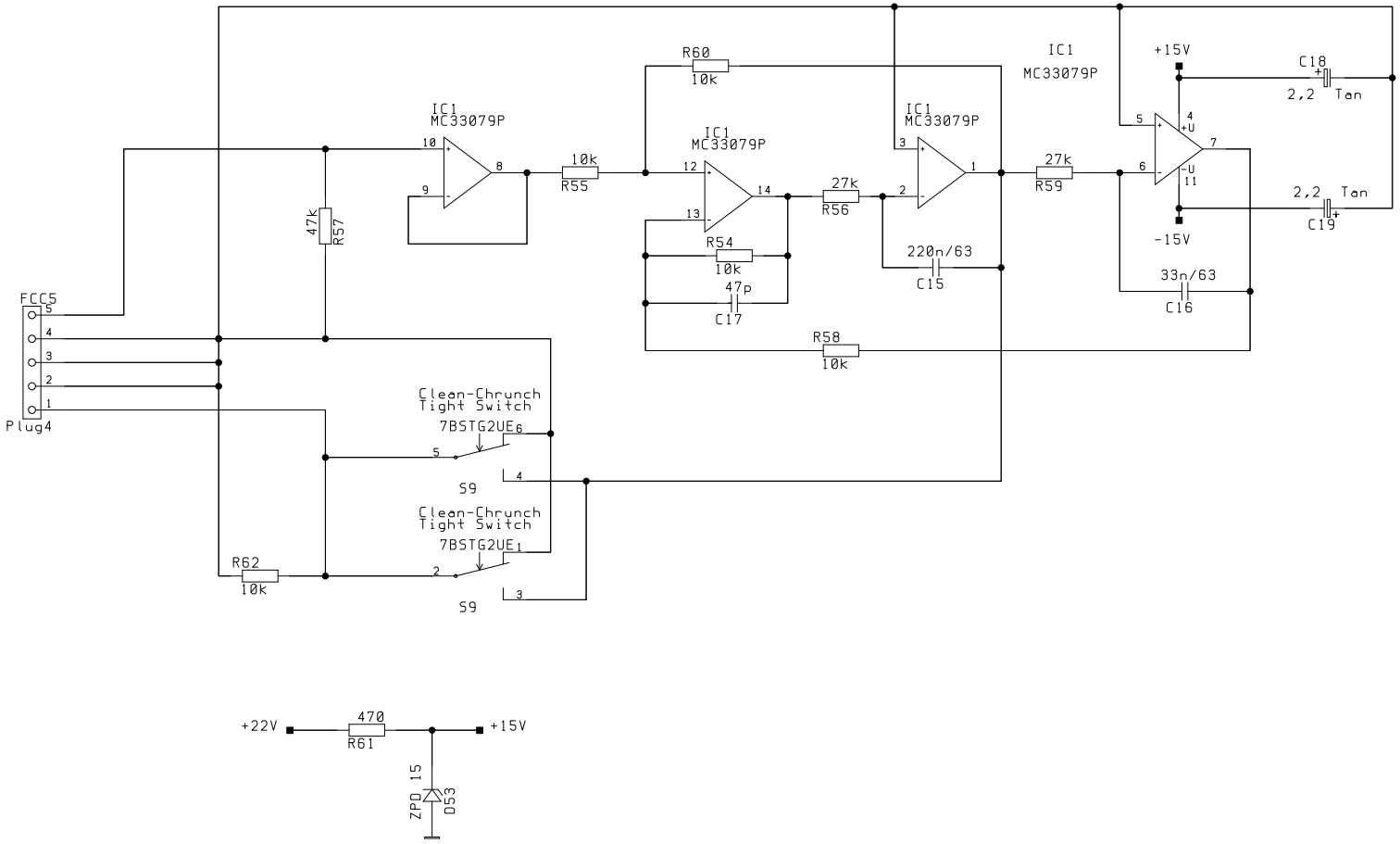

Hughes & Kettner		Date 25.10.94
Title TRIAMP Tight Filter		
Page E	Checked BY	Date

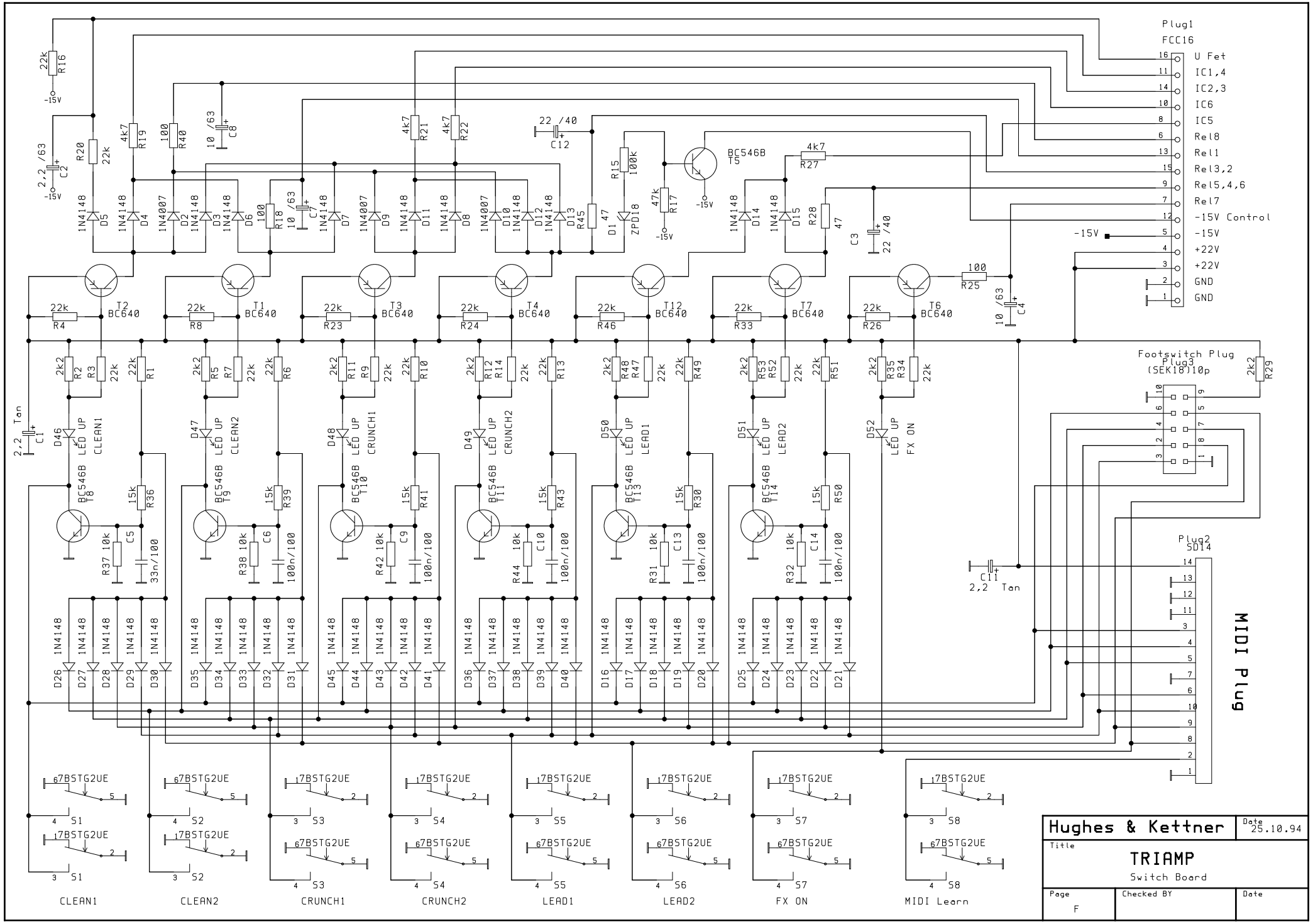
Plug1
FCC16
U Fet
IC1,4
IC2,3
IC6
IC5
Rel8
Rel1
Rel3,2
Rel5,4,6
Rel7
-15V Control
-15V
+22V
+22V
GND
GND
Footswitch Plug
Plug3
(SEK18)10p
Plug2
SD14
MIDI Plug
CLEAN1
CLEAN2
CRUNCH1
CRUNCH2
LEAD1
LEAD2
FX ON
MIDI Learn
Hughes & Kettner
Date
25.10.94
Title
TRIAMP
Switch Board
Page
F
Checked BY
Date

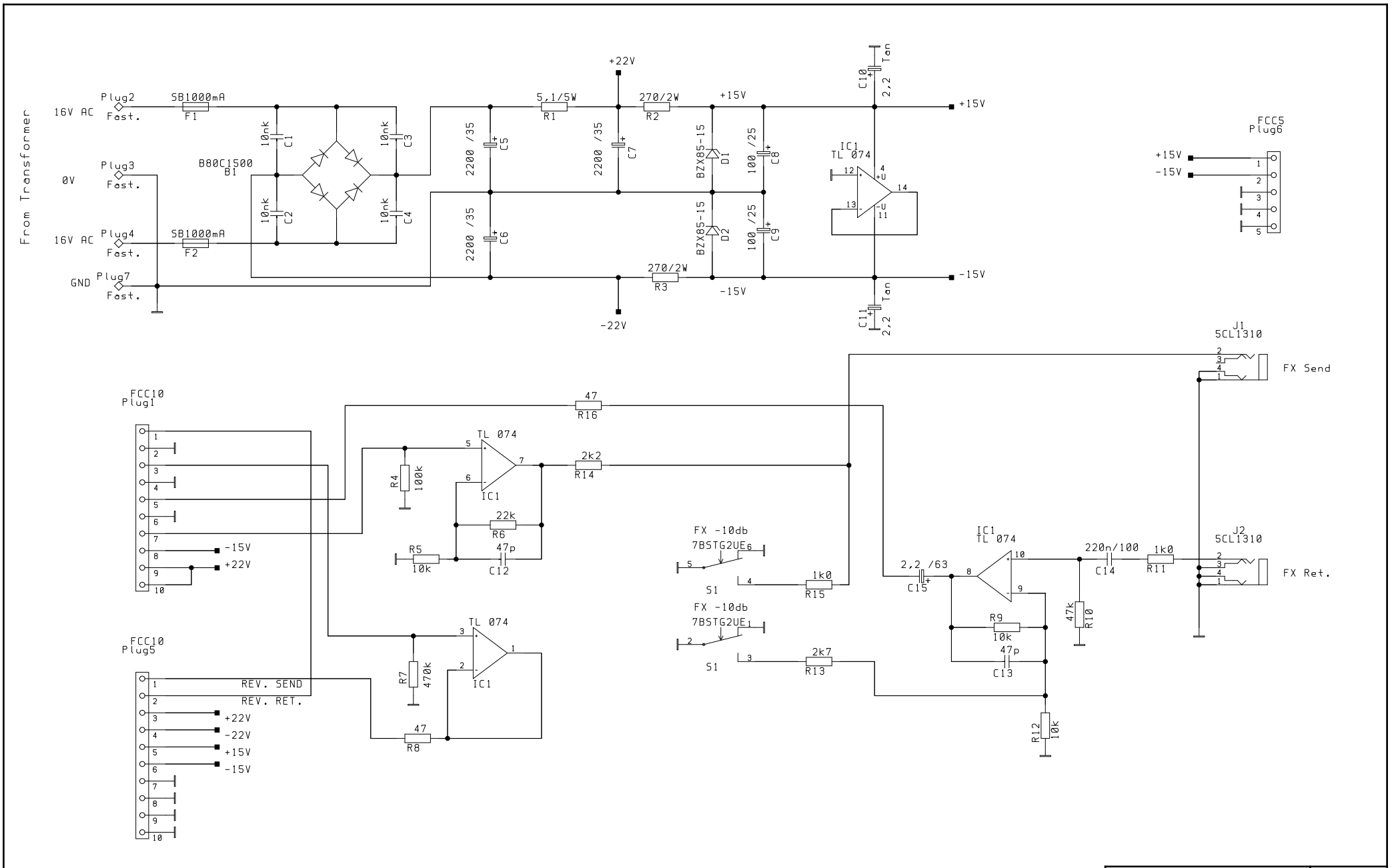

Hughes & Kettner	Date 25.10.94
Title: TRIAMP — Power Supply & FX Buffer	
Page: G	Checked BY	Date

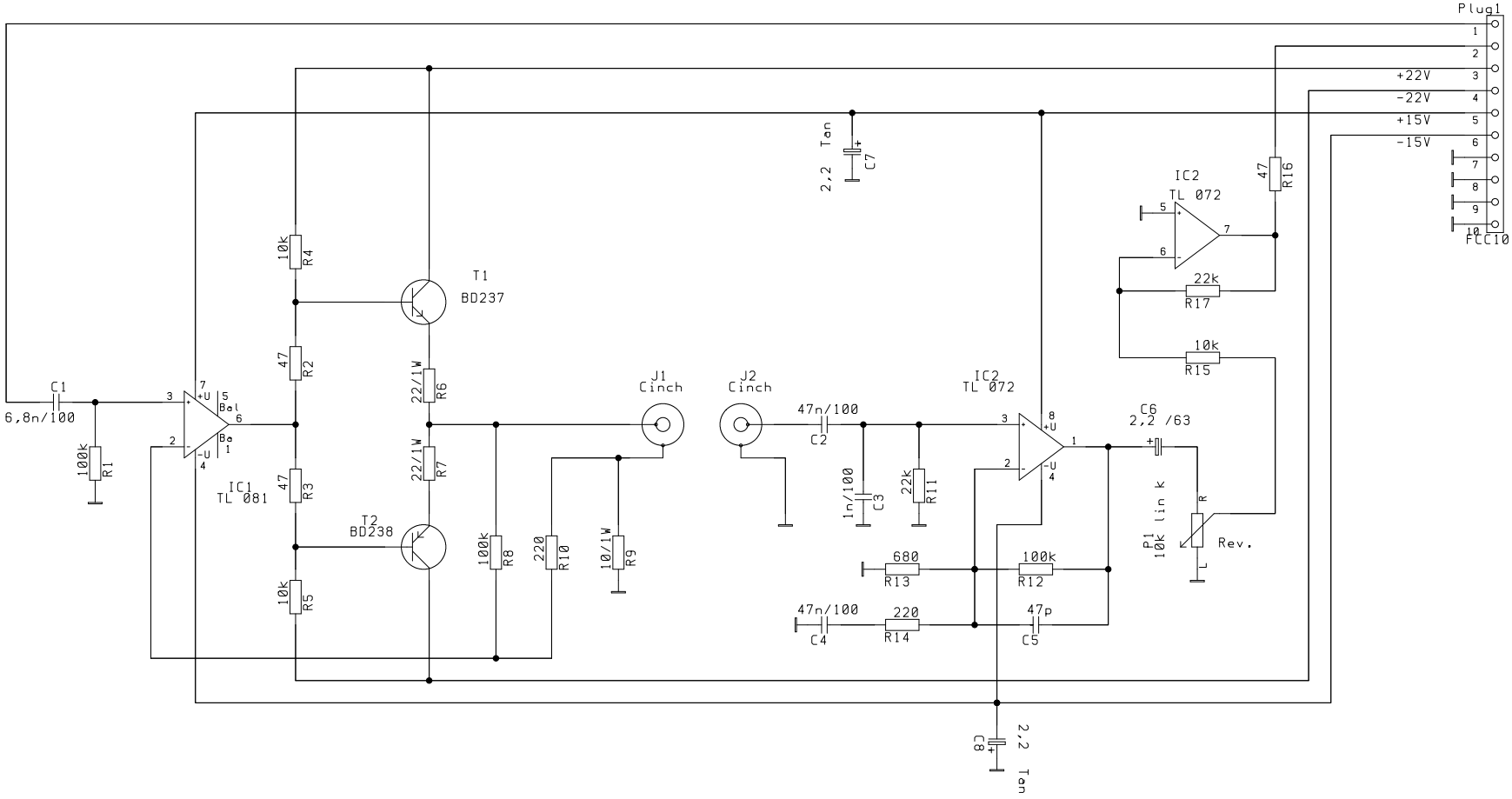

Hughes & Kettner	Date 25.10.94
Title TRIAMP Reverb	
Page H	Checked BY / Date

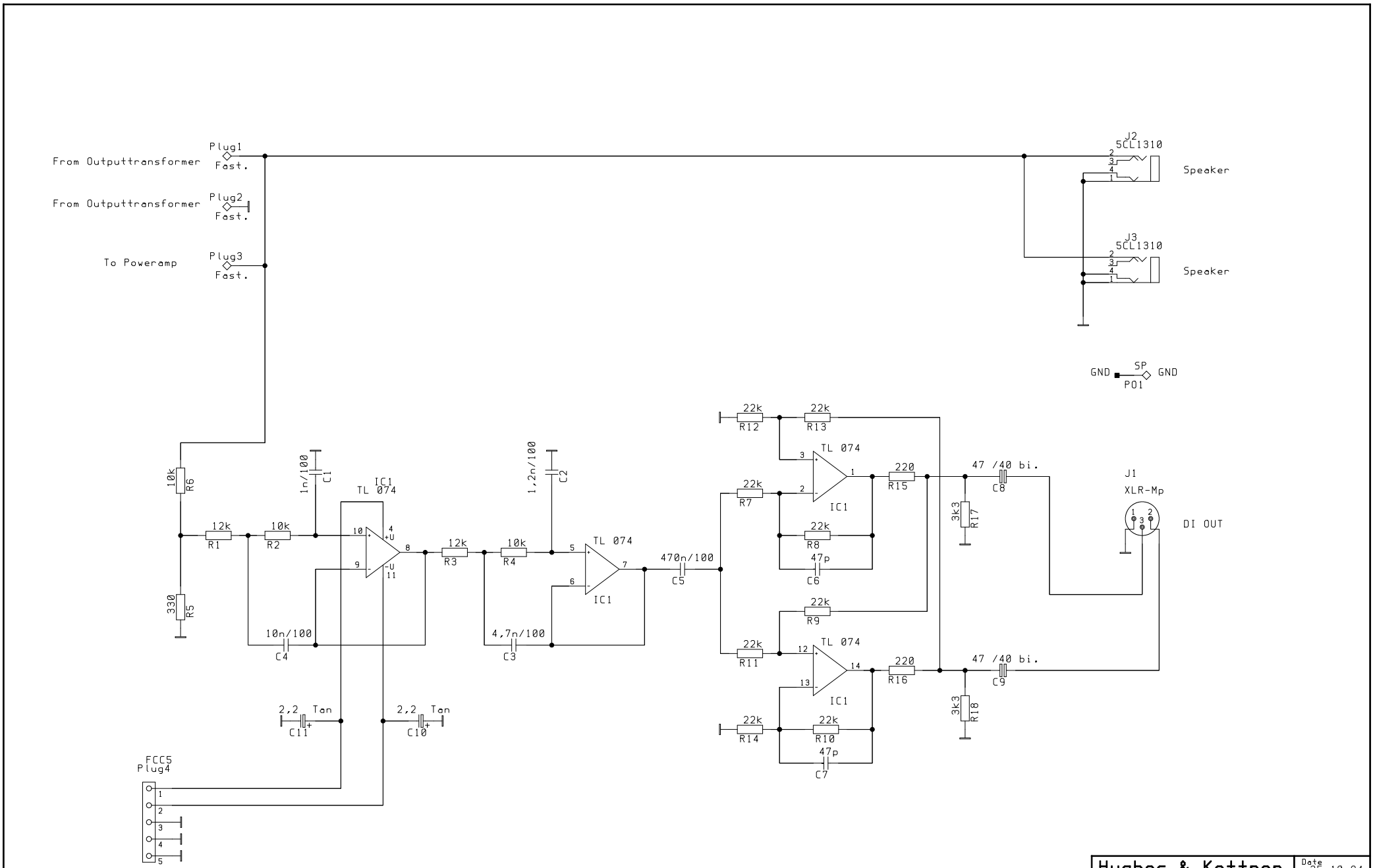

Hughes & Kettner	Date 25.10.94
Title TRIAMP DI OUT	
Page I	Checked BY / Date

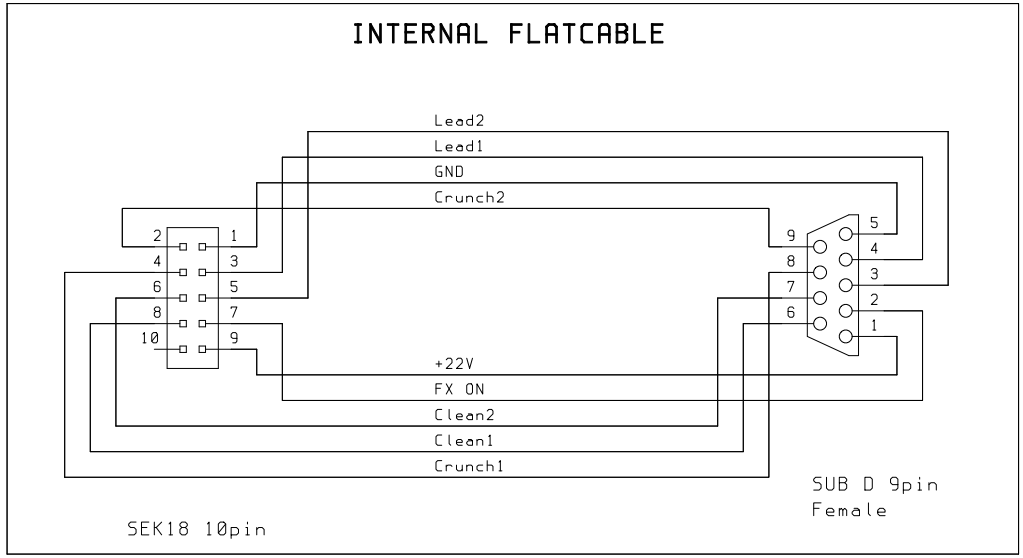

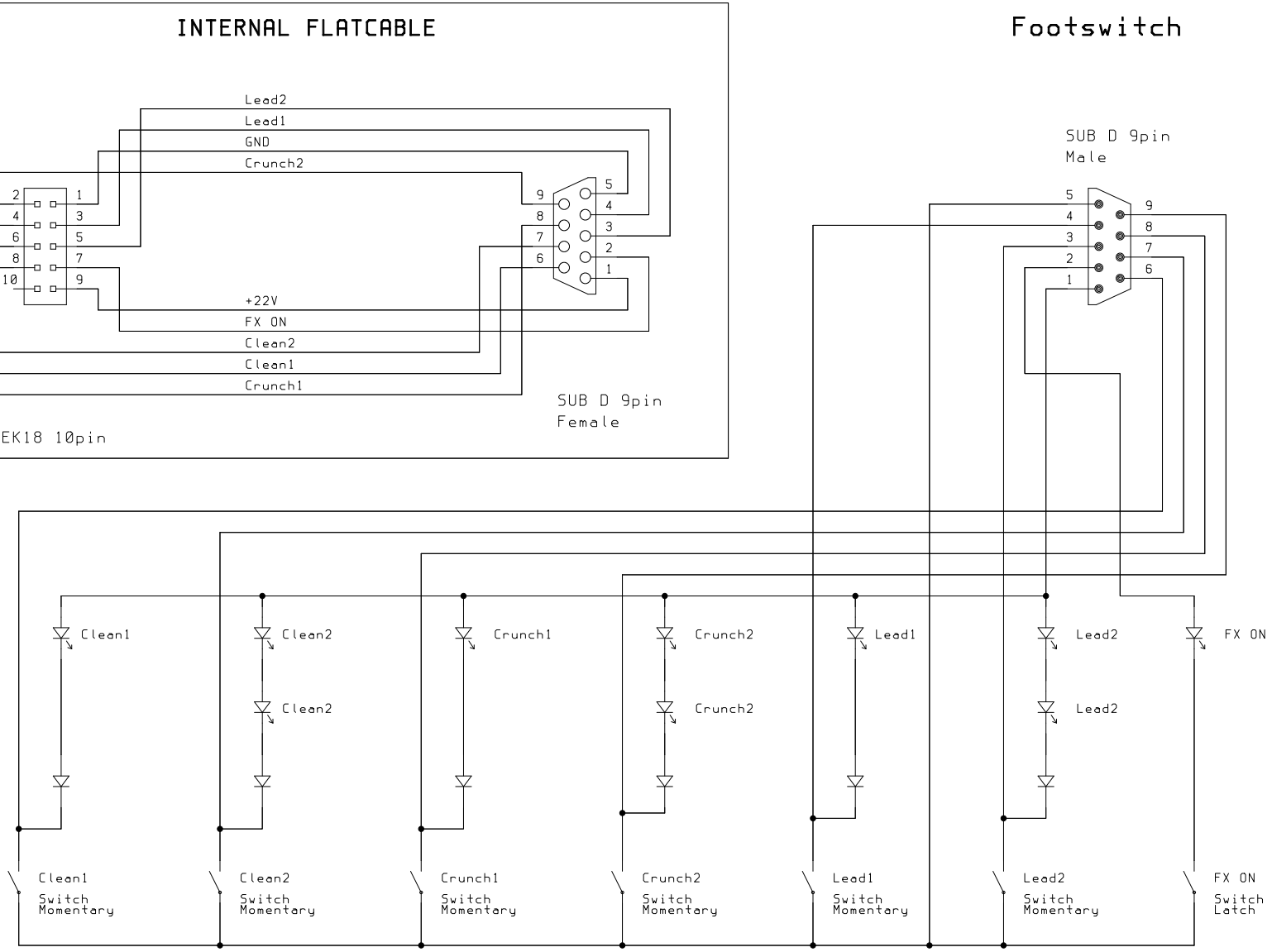

Hughes & Kettner		Date 19.9.94
Title TRIAMP Footswitch		
Page J	Checked BY	Date

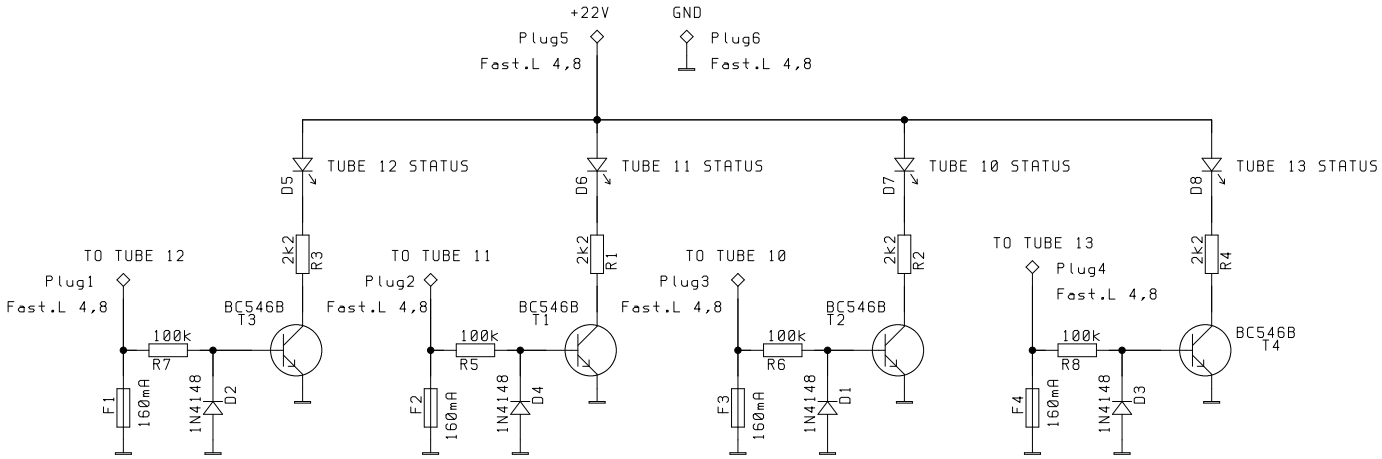

Hughes & Kettner	Date 23.1.97
Title TRIAMP Fuse Board	
Page K	Checked BY / Date

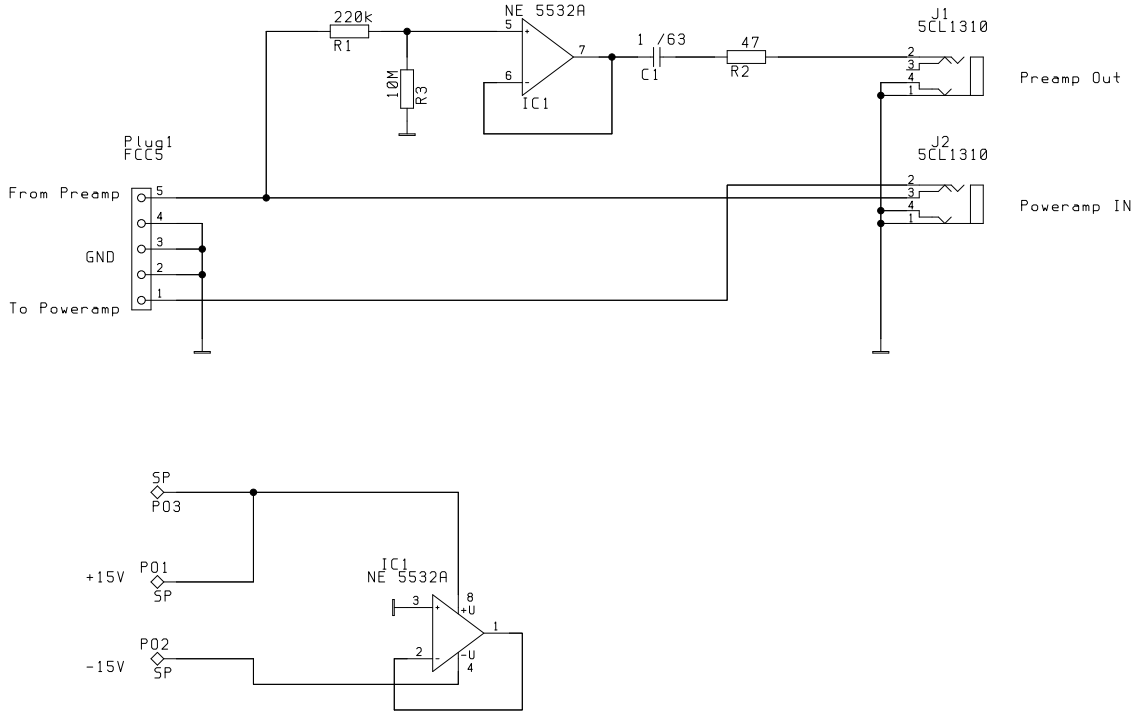

Hughes & Kettner	Date 24.1.97
Title TRIAMP Loopboard	
Page L	Checked BY	Date

2 Bestückungspläne/ component parts

Clean-Crunch
Lead-FX-Master
Poweramp
Power Supply

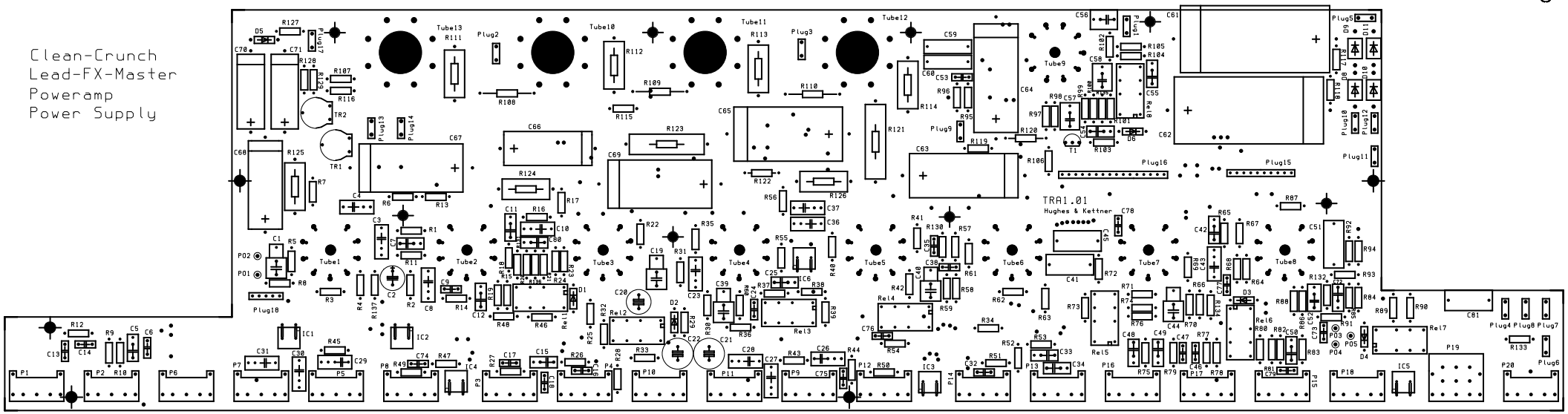

Tight Filter
Switch Board

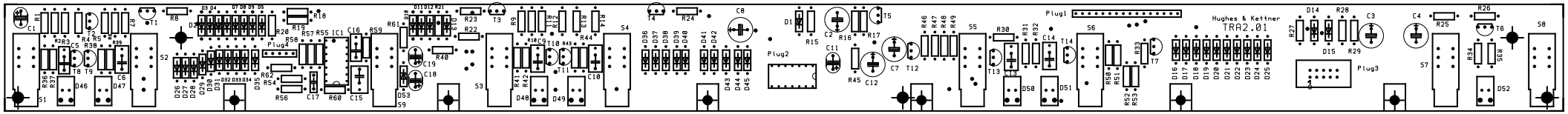

Power Supply / FX Buffer

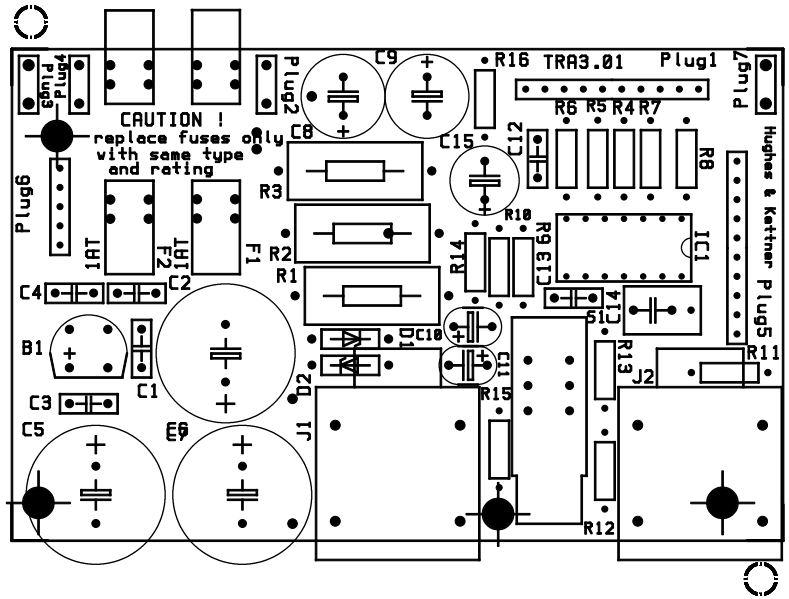

DI OUT

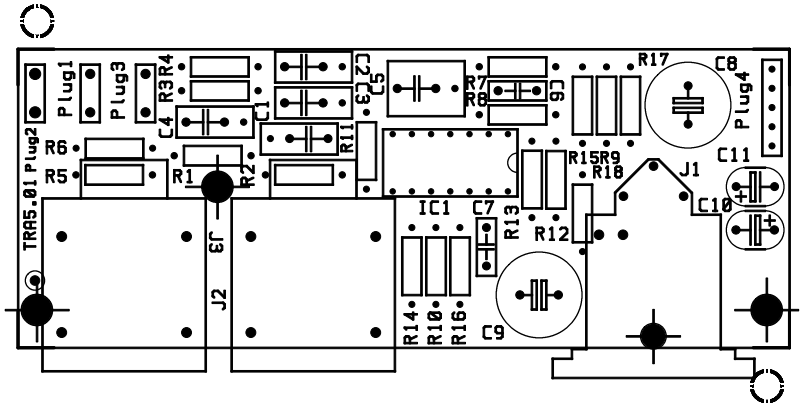
TRA5.01
Plug2
R5
R6
Plug1
Plug3
R3
R4
C4
R1
R2
J2
J3
C1
C2
C3
C5
R11
IC1
R7
R8
C6
R13
C7
R14
R10
R16
C9
R15
R9
R18
R12
R17
C8
J1
C10
C11
Plug4

REVERB

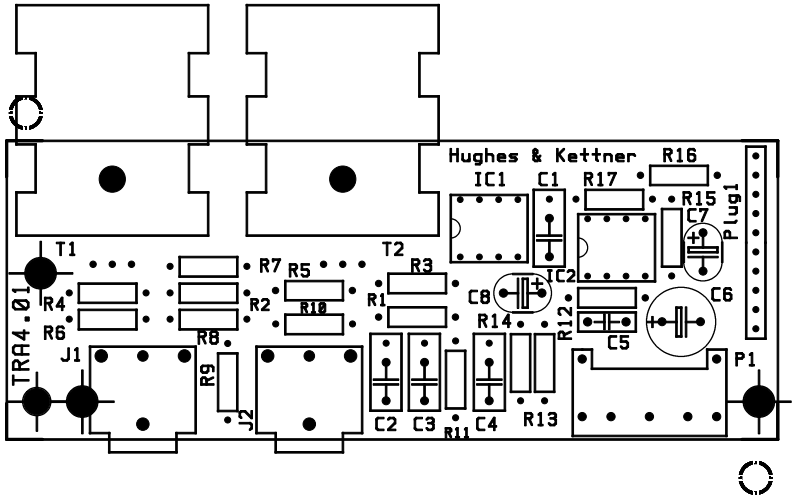
Hughes & Kettner
IC1
C1
R17
R16
R15
C7
Plug1
T1
T2
R3
R7
R5
R4
R2
R10
R1
C8
IC2
C6
R6
R8
R14
R12
C5
TRA4.01
J1
R9
J2
C2
C3
R11
C4
R13
P1

LOOPBOARD

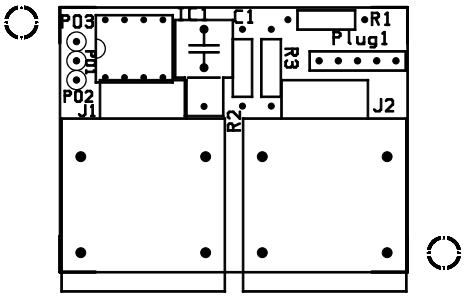

FUSE BOARD

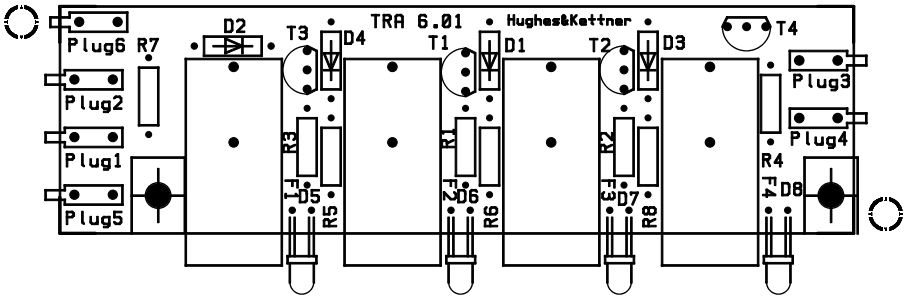
TRA 6.01
Hughes&Kettner
Plug6
Plug2
Plug1
Plug5
R7
D2
T3
D4
R3
F1
D5
R5
T1
D1
R1
F2
D6
R6
T2
D3
R2
F3
D7
R8
T4
Plug3
Plug4
R4
F4
D8

Footswitch

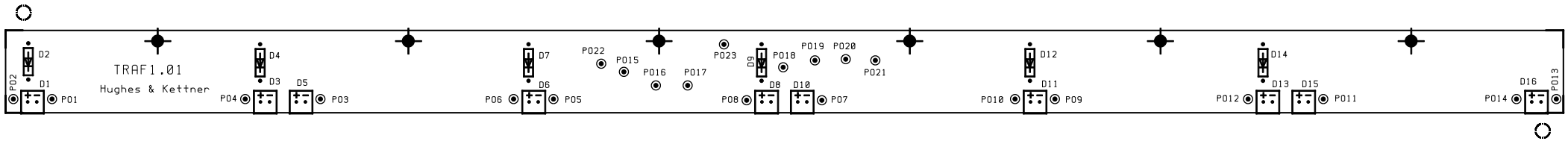
TRAF1.01
Hughes & Kettner
D1
D2
D3
D4
D5
D6
D7
D8
D9
D10
D11
D12
D13
D14
D15
D16
PO1
PO2
PO3
PO4
PO5
PO6
PO7
PO8
PO9
PO10
PO11
PO12
PO13
PO14
PO15
PO16
PO17
PO18
PO19
PO20
PO21
PO22
PO23

3 Bestellnummern/ order no. Triamp

no.	schematic position	name	specs	part no.
1	mains switch	switch	230V/ illum.:117V lampe	E 950 030
2	standby switch	switch	230V/ illum.:117V lampe	E 950 030
3	mains transformer	transformer	230V/ 117V/ 100V	E 958 056
4	output transformer	transformer	ÜA100101	E 958 057
5	inductor	coil	ND 60	E 958 058
	main board			
6	P1 (AMP1 gain A)	pot	1 MΩ log, mono	E 914 047
7	P2 (AMP1 gain B)	pot	250 KΩ log, mono	E 914 044
8	P3 (AMP2 gain A)	pot	1 MΩ log, mono	E 914 047
9	P4 (AMP2 gain B)	pot	250 KΩ log, mono	E 914 044
10	P5 (AMP1 treble)	pot	250 KΩ lin, mono	E 914 043
11	P6 (AMP1 bass)	pot	1 MΩ log, mono	E 914 047
12	P7 (AMP1 mid)	pot	25 KΩ log, mono	E 914 048
13	P8 (AMP1 master)	pot	500 KΩ lin, mono	E 914 030
14	P9 (AMP2 treble)	pot	250 KΩ log, mono	E 914 044
15	P10 (AMP2 bass)	pot	1 MΩ log, mono	E 914 047
16	P11 (AMP2 mid)	pot	25 KΩ lin, mono	E 914 041
17	P12 (AMP2 master)	pot	250 KΩ log, mono	E 914 044
18	P13 (AMP3 gain B)	pot	250 KΩ log, mono	E 914 044
19	P14 (AMP3 gain A)	pot	500 KΩ log, mono	E 914 042
20	P15 (AMP3 treble)	pot	250 KΩ lin, mono	E 914 043
21	P16 (AMP3 bass)	pot	1 MΩ log, mono	E 914 047
22	P17 (AMP3 mid)	pot	25 KΩ lin, mono	E 914 041
23	P18 (AMP3 master)	pot	250 KΩ log, mono	E 914 044
24	P19 (fx- mix)	pot	500 KΩ log, stereo	E 914 046
25	P20 (master)	pot	250 KΩ lin, mono	E 914 043
26	P21 (presence)	pot	1 MΩ log, mono	E 914 047
27	D5	diode	1N4007	E 934 023
28	D8- D11	diode	1N5404/ 3A/ 400V	E 934 025
29	C61, C62	hv cap	220u/ 350V ax	E 926 016
30	C63, C64	hv cap	47u/ 350V ax	E 926 015
31	C65,	hv cap	33u/ 500V ax	E 926 014
32	C67, C69	hv cap	33u/ 450V ax	E 926 009
33	C66, C68	hv cap	15u/ 450V ax	E 926 006
34	TR1	trim pot	250 Ω	E 915 010
35	TR2 (EL34)	trim pot	50 KΩ	E 915 012
36	TR2 (6L6GC)	trim pot	100 KΩ	E 915 005
37	Rel 1- Rel 8	relay	TFA 002/ 24Vdc	E 946 008
38	IC1- IC8	opto coupler	LT3011/2 ACC	E 940 037
39	T1	transistor	BF245B	E 938 028
40	Tube1	tube	ECC83/ 12AX7A highgrade	E 944 008
41	Tube2- Tube9	tube	ECC83/ 12AX7A	E 944 007
42	tube socket	socket	9pin/ pcb mount	E 944 003
43	Tube4- Tube7	EL34B	DSS matched **	E 944 017
44	Tube4- Tube7	6L6GC	DSS matched **	E 944 005
45	tube socket	socket	8pin/ pcb mount	E 944 004
46	tube shielding	shielding	for 9pin socket	E 944 010
			** DSS matched quartets available; to order a single tube, please state the PC value indicated on the tube	

GD/ 08.11. 99

no.	schematic position	name	specs	part no.
	switch board			
1	S1- S9	switch	2 x um	E 950 001
2	T1- T4, T6, T7, T12	transistor	BC640	E 938 014
3	T5, T8- T11, T13, T14	transistor	BC546B	E 938 009
4	D46, D47, D52	LED green	5 mm/ green/ flat top	E 936 006
5	D48, D49	LED yellow	5 mm/ yellow/ flat top	E 936 008
6	D50, D51	LED red	5 mm/ red/ flat top	E 936 007
7	IC1	OP Amp	MC33079P	E 940 051
	fx board			
8	S1	switch	2 x um	E 950 001
9	B1	rectifier	B80C1500	E 934 027
10	D1, D2	z- diode	15V/ 1,3W	E 934 004
11	IC 1	OP Amp	TL074	E 940 019
12	J1, J2	jack	¼“ phone jack mono	E 952 038
	reverb board			
13	P1	pot	10 KΩ lin, mono	E 914 033
14	IC 1	OP Amp	TL081	E 940 020
15	IC 2	OP Amp	TL072	E 940 018
16	T1	transistor	BD237	E 938 019
17	T2	transistor	BD238	E 938 022
18	J1, J2	jack	RCA/ cinch T- 709	E 952 045
	loop board			
19	IC 8	OP Amp	NE5532A	E 940 004
20	J1, J2	jack	¼“ phone jack mono	E 952 038
	DI board			
21	IC 1	OP Amp	TL074	E 940 019
22	J1	jack	XLR jack	E 952 054
23	J2, J3	jack	¼“ phone jack mono	E 952 038
	fuse board			
24	D5- D8	LED	LED/ red/ standard	E 936 003
25	T1- T4	transistor	BC546B	E 938 009
26	F1- F4	fuse holder	print, with fuse carrier	E 948 003
	stage board			
27	D1- D6	diode	1N4007	E 934 023
28	LED green	LED	LED/ green/ standard	E 936 010
29	LED yellow	LED	LED/ yellow/ standard	E 936 012
30	LED red	LED	LED/ red/ standard	E 936 011
31	S1- S6	switch	momentary switch DS133	E 950 010
32	S2 (fx on)	switch	tristage	E 950 011

4 Bestellinformationen/ ordering informations

Bestellinformationen und Ersatzteilbestellungen

Deutschland:
Music & Sales
Leipziger Straße 3
D- 66606 St. Wendel
Service
Tel.: 06851/ 905 333
Fax: 06851/ 905 100
E-mail: service@musicandsales.com
Technische Fragen
Tel.:06851/ 905 330
E-mail: service@musicandsales.com

Sparepart orders and technical questions for all other countries:

contact your local distributor or

Hughes & Kettner
Leipzigerstr. 3
66606 St. Wendel
Germany
Tel.: +49 6851/905 210
Fax: +49 6851/905 200
Email: intlservice_handk@musicandsales.com

5 Technische Daten/ technical data

Triamp

Eingänge/ inputs:

Input:	Buchse/ connection:	¼" phone jack
	Bauart Eingang/ input type:	unbalanced
	Eingangsimpedanz/ input impedance:	1 MΩ
	Empfindlichkeit/ sensitivity:	- 10 dB
	max. Eingangspegel/ max.input level:	+10 dB
FX- Return:	Buchse/ connection:	¼" phone jack
	Bauart Eingang/ input type:	unbalanced
	Eingangsimpedanz/ input impedance:	47 kΩ
	Empfindlichkeit/ sensitivity:	0 dB (- 10dB switchable)
	max. Eingangspegel/ max.input level:	+6 dB

Ausgänge/ outputs:

FX- Send:	Buchse/ connection:	¼" phone jack
	Bauart Ausgang/ output type:	unbalanced
	Ausgangsimpedanz/ output impedance:	1 kΩ
	Ausgangspegel/ output level:	0 dB (- 10dB switchable)
	max. Ausgangspegel/ max.output level:	+6 dB
DI- Out:	Buchse/ connection:	XLR
	Bauart Ausgang/ output type:	balanced
	Ausgangsimpedanz/ output impedance:	400 Ω
	min. Ausgangspegel/ min.output level:	- 40 dB
	max. Ausgangspegel/ max.output level:	- 10 dB

Power amp:
100 Watts (RMS) into 4 Ω @ k = 1%
100 Watts (RMS) into 8 Ω @ k = 1%
80 Watts (RMS) into 16 Ω @ k = 1%

Bias level:
factory setting: 30 mA per tube (EL34/ 6L6GC)
allowed range: 28 mA- 38 mA

Speaker out:
Anzahl/ no.: 4 x Klinke/ ¼" phone jack
Impedanz/ impedance: 4 Ω / 8 Ω / 16 Ω

Speaker (Combo):

no.\ size:	2 x 12"
type \ name:	Celestion Rock Driver Pro 100
impedance:	2 x 8 Ohm
power handling:	100 Watt
power handling programm:	200 Watt

GD/ 08.11. 99

Allgemeine elektrische Daten/ general electrical data:

Schutzklasse I/ protection class 1 (protectively earthed)

Netzspannung/ mains voltage:	230V	Netzsicherung/ fuse:	T 2,5 A
Netzspannung/ mains voltage:	117V	Netzsicherung/ fuse:	T 5 A oder SB 5 A
Netzspannung/ mains voltage:	100V	Netzsicherung/ fuse:	T 6,3 A
		Anode fuse:	1 x T 1 A
		Cathode fuse:	4 x T 200 mA

max. Stromaufnahme/ max. current:	1,9 A @ 230V
max. Leistungsaufnahme/ max. power consumption:	440 VA
Netzspannungsbereich/ mains voltage range:	+/- 10 %
Umgebungstemperaturbereich/ temperatur range:	- 10 °C bis + 60 ° C
interne Sicherungen/ internal fuses:	2 x T 1 A (low voltage)

Allgemeine mechanische Daten/ general mechanical data:

Combo:
Abmessungen/ sizes: Breite/ width: 540 mm Höhe/ height: 740 mm Tiefe/ depth: 295 mm
Gewicht/ weight: 40 kg

Head:
Abmessungen/ sizes: Breite/ width: 290 mm Höhe/ height: 740 mm Tiefe/ depth: 275 mm
Gewicht/ weight: 27 kg