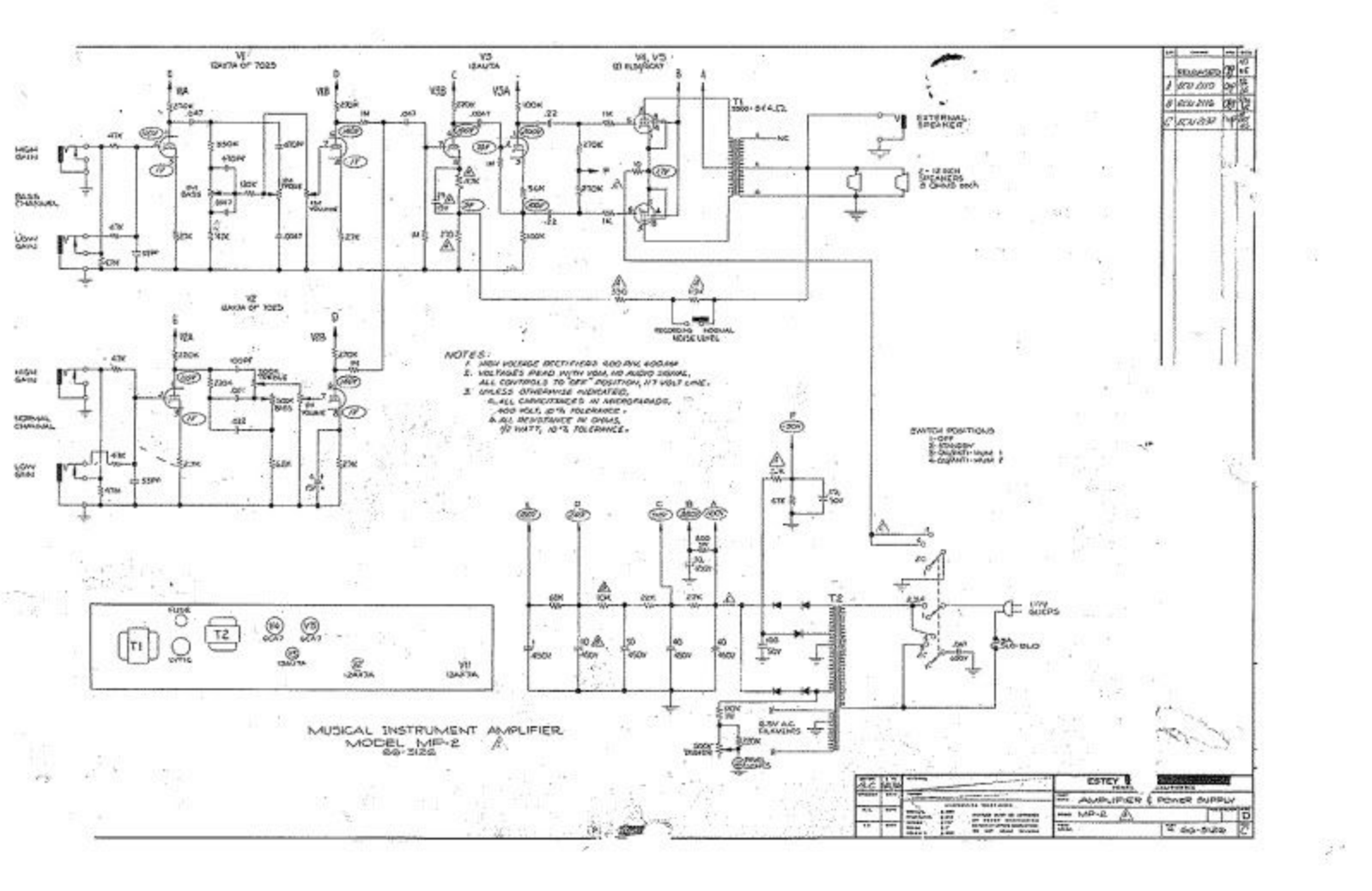

V1
12AX7A OF 7025
V3
12AU7A
V4, V5
(2) EL34/6CA7
V2
12AX7A OF 7025
HIGH GAIN
BASS CHANNEL
LOW GAIN
NORMAL CHANNEL
EXTERNAL SPEAKER
2 - 12 INCH SPEAKERS 8 OHMS each
RECORDING NORMAL NOISE LEVEL
NOTES:
1. HIGH VOLTAGE RECTIFIERS 400 PIV, 400 MA
2. VOLTAGES READ WITH VOM, NO AUDIO SIGNAL, ALL CONTROLS TO "OFF" POSITION, 117 VOLT LINE.
3. UNLESS OTHERWISE INDICATED,
a. ALL CAPACITANCES IN MICROFARADS, 400 VOLT, 10% TOLERANCE.
b. ALL RESISTANCE IN OHMS, 1/2 WATT, 10% TOLERANCE.
SWITCH POSITIONS
1-OFF
2-STANDBY
3-CALIBRATE-VOM 1
4-CALIBRATE-VOM 2
T1
T2
FUSE
CYTIC
V4
6CA7
V5
6CA7
V3
12AU7A
V2
12AX7A
V1
12AX7A
117V SLEEPS
6.3V A.C. FILAMENTS
MUSICAL INSTRUMENT AMPLIFIER
MODEL MP-2
SG-5122
ESTEY
AMPLIFIER & POWER SUPPLY
MP-2
SG-5122