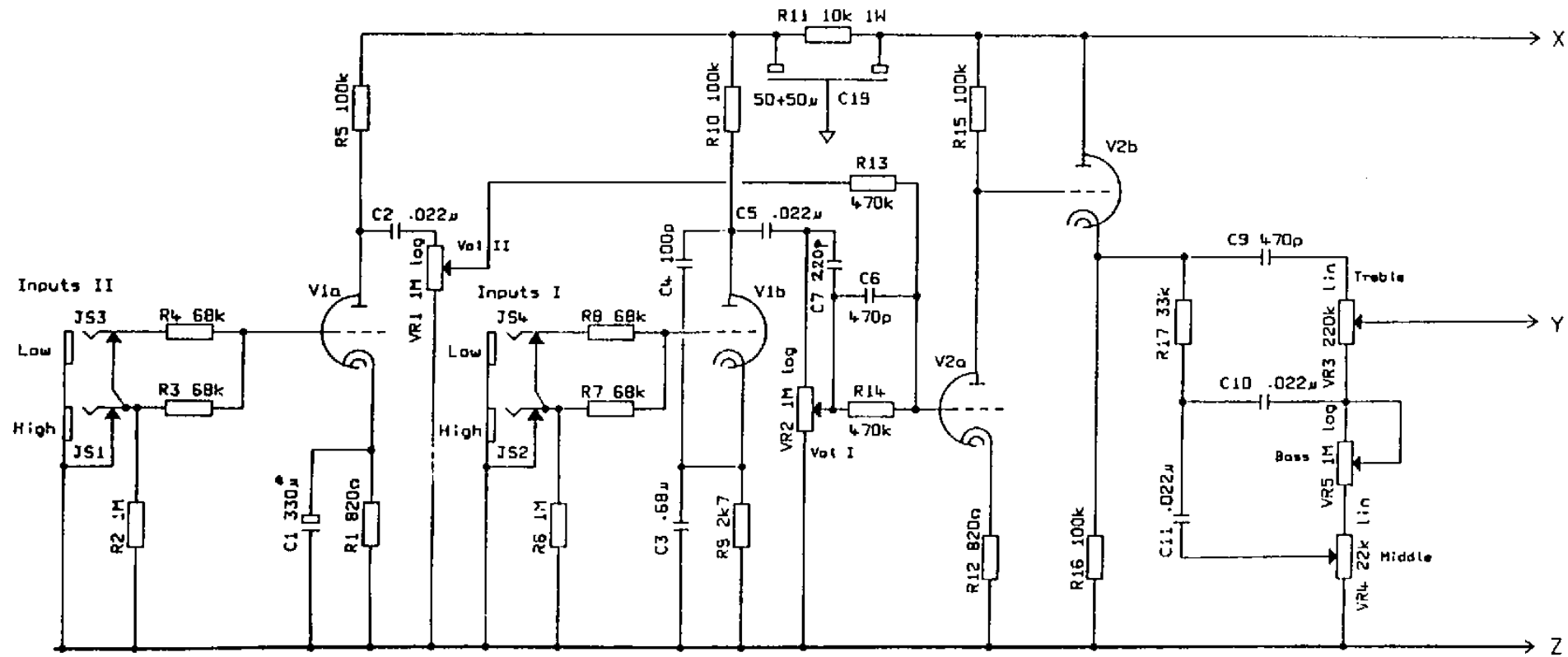

NOTES

PCB: JM80

V1.2: ECC83, filament supply shown on power stage diagram.

JS3.4 chassis mounted and linked to board

4	18-5-88	CPV
ISS.	DATE	DRN.

DRAWING NUMBER

1959 STD
Preamp

MARSHALL

JIM MARSHALL PRODUCTS LTD.
BLETCHLEY
MILTON KEYNES
ENGLAND

File: 1987PRE.DGM