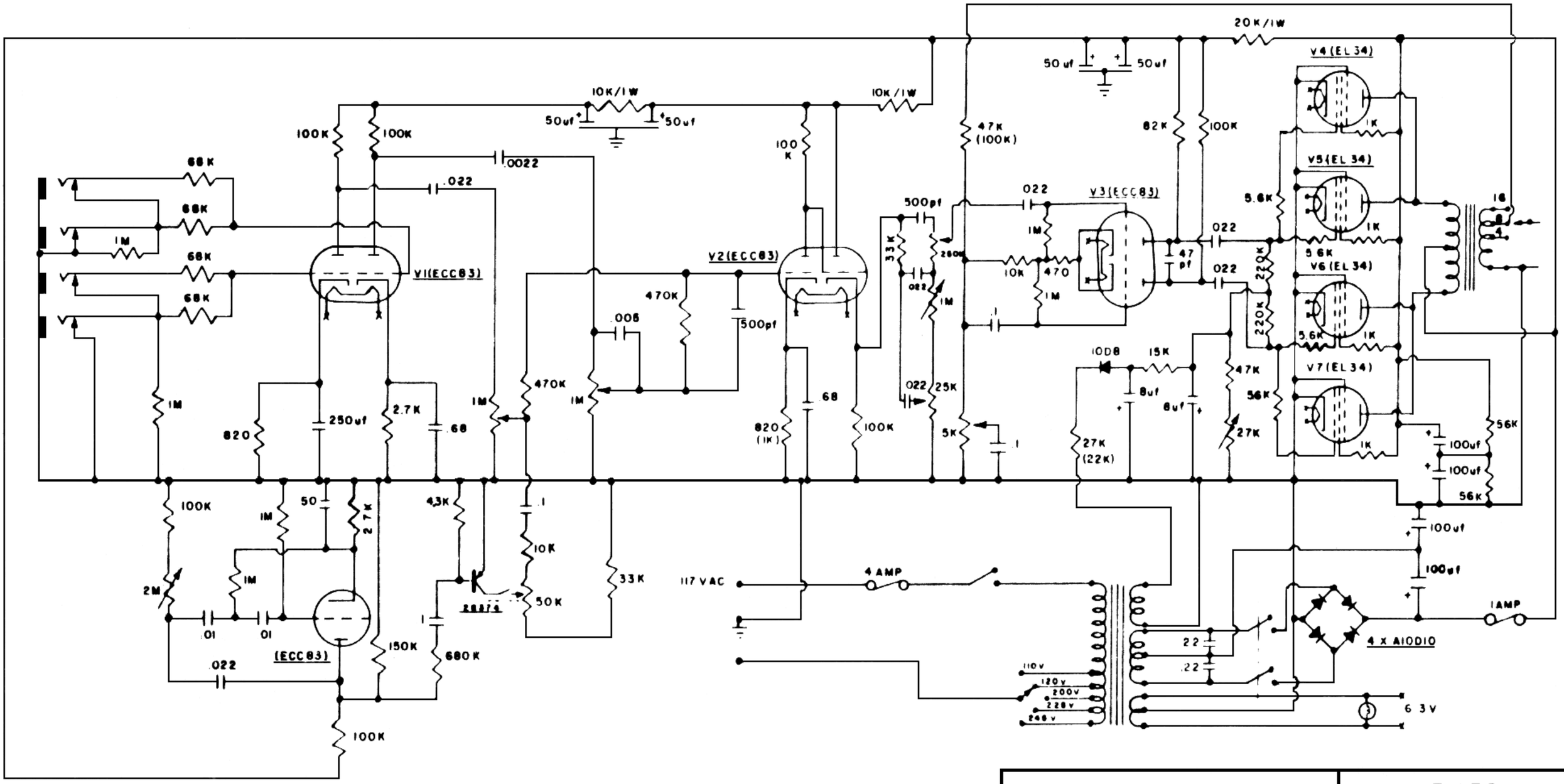

MARSHALL

1959T

G.N

UNICORD INCORPORATED

70-11-11

SCALE

JULY 70