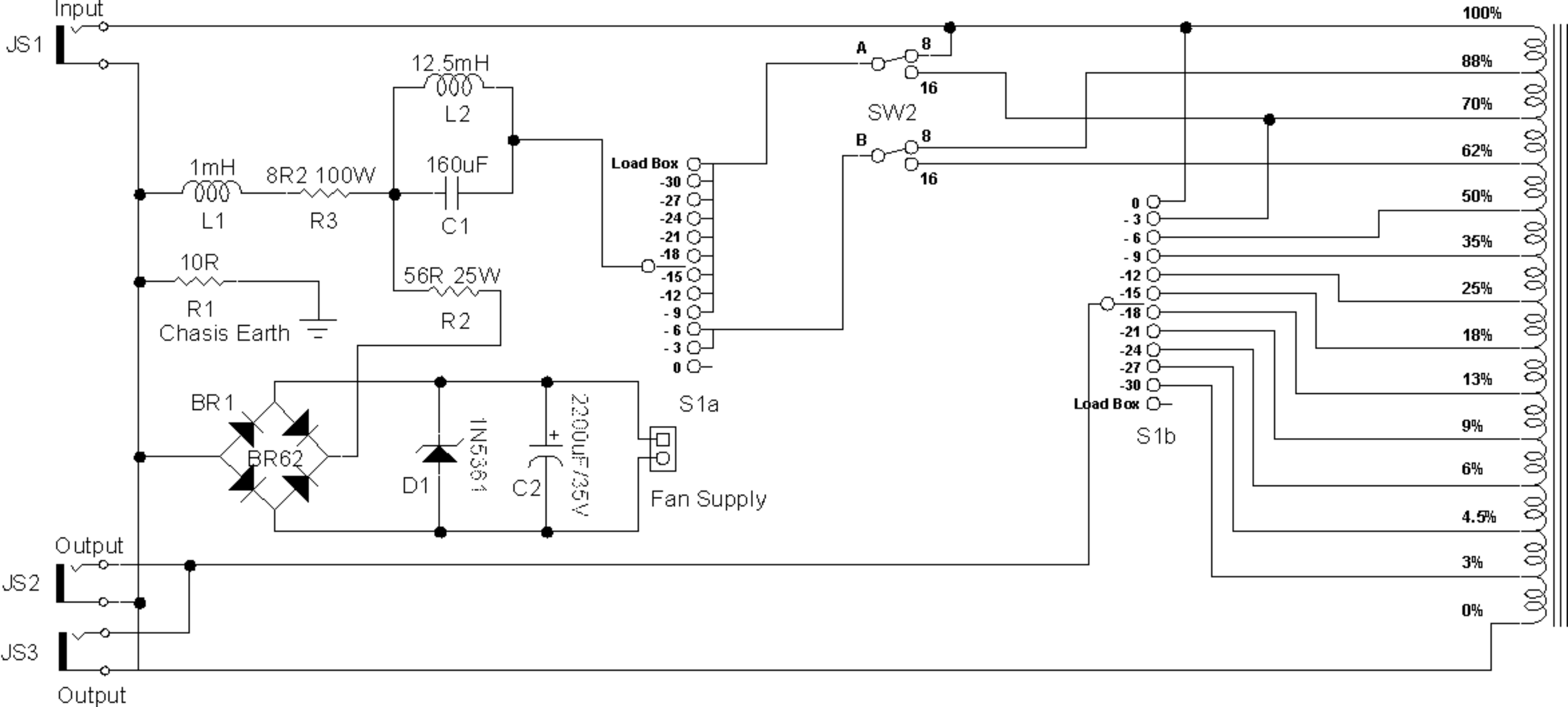
Input
JS1
12.5mH
L2
160uF
C1
1mH
L1
8R2 100W
R3
10R
R1
Chasis Earth
56R 25W
R2
BR1
BR62
D1
1N5361
C2
2200uF/35V
Fan Supply
Output
JS2
JS3
Output
Load Box
-30
-27
-24
-21
-18
-15
-12
- 9
- 6
- 3
0
S1a
A
B
8
16
SW2
0
- 3
- 6
- 9
-12
-15
-18
-21
-24
-27
-30
Load Box
S1b
100%
88%
70%
62%
50%
35%
25%
18%
13%
9%
6%
4.5%
3%
0%