120w GRAPHIC MK II (EARLY MODEL)

Orange

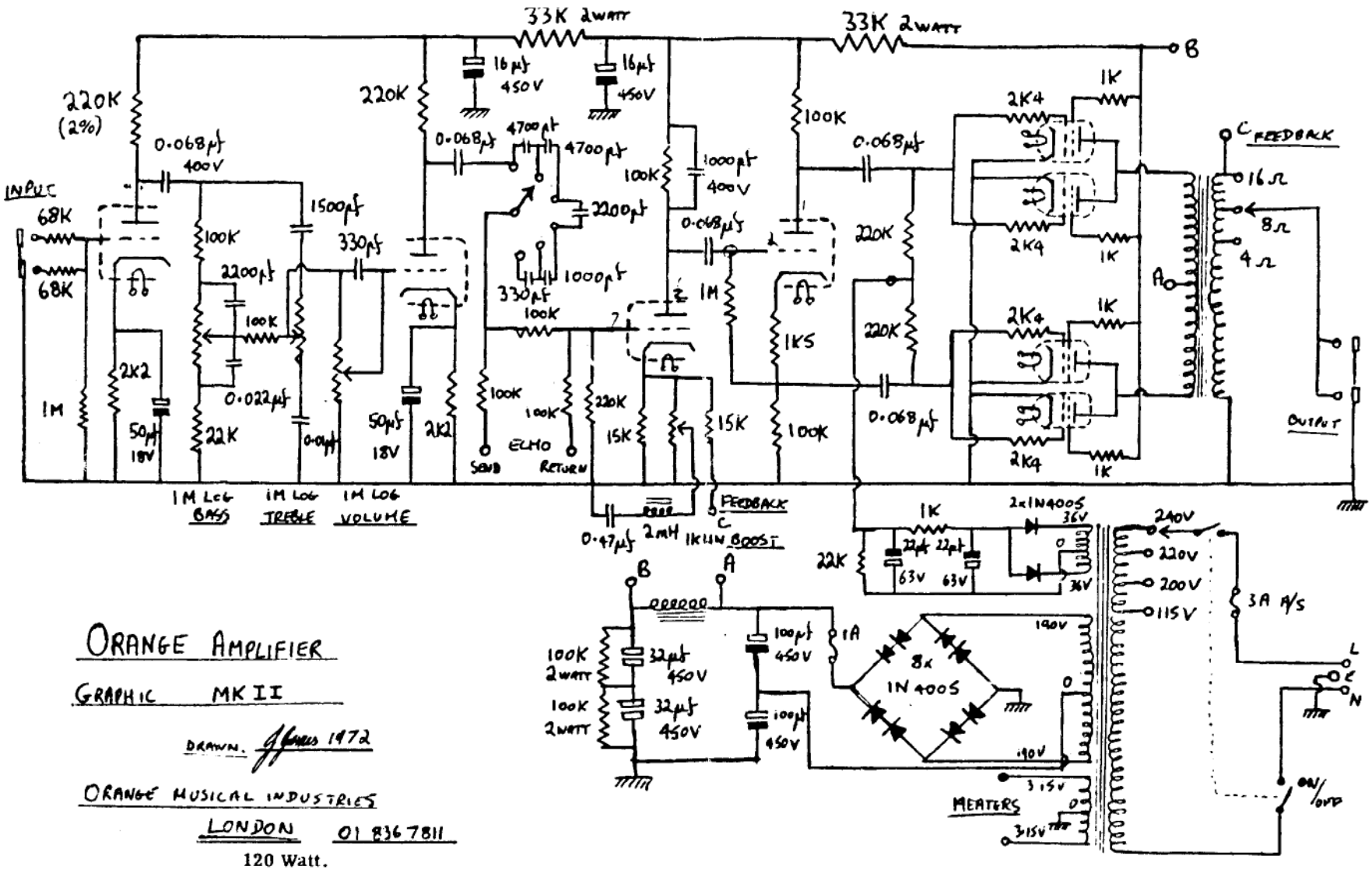

ORANGE AMPLIFIER

GRAPHIC MK II

DRAWN. 1972

ORANGE MUSICAL INDUSTRIES

LONDON 01 836 7811

120 Watt.

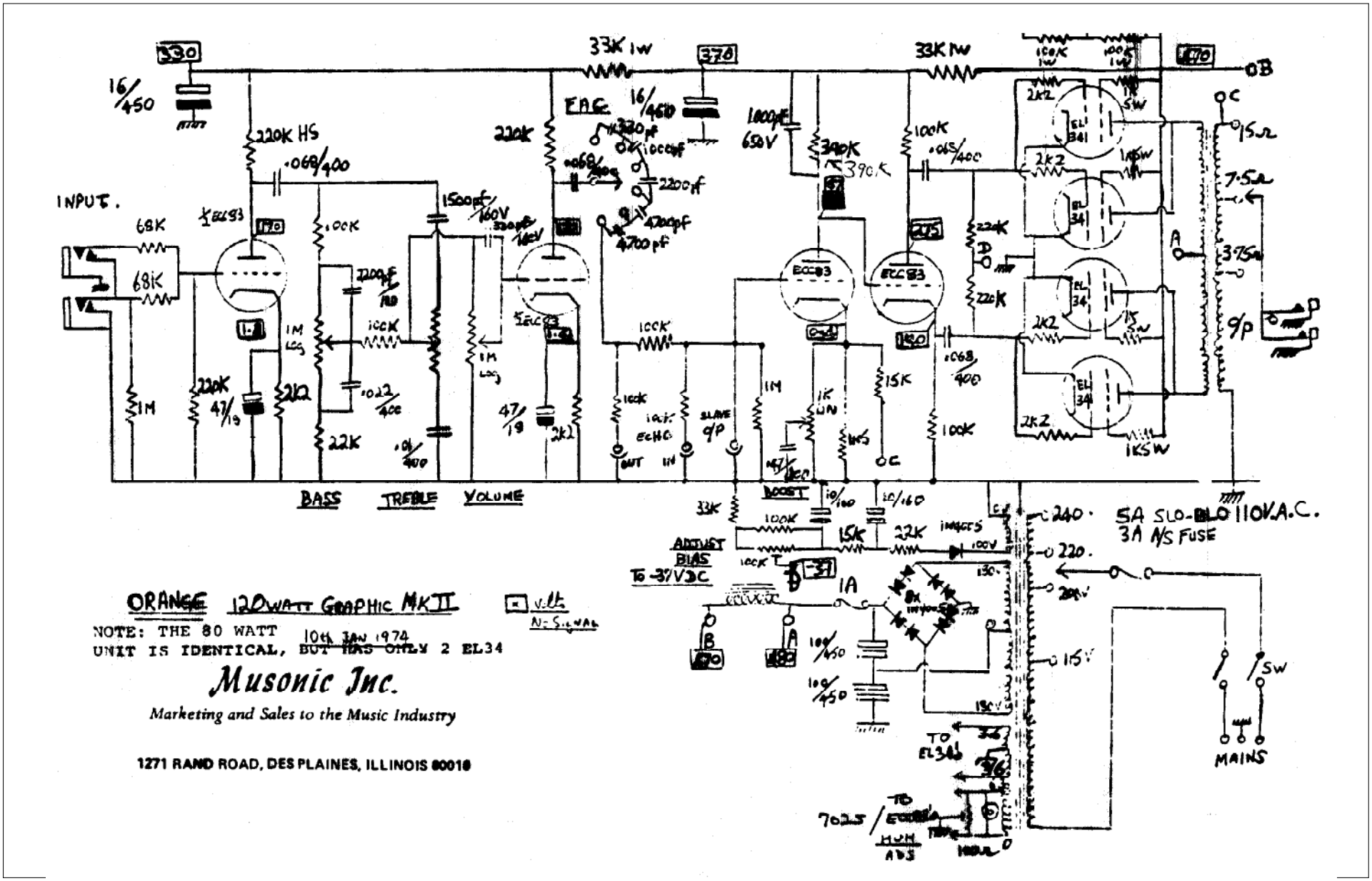
INPUT.
BASS
TREBLE
VOLUME
EAC
ECHO
SLAVE o/p
BOOST
ADJUST BIAS TO -37V DC
5A SLO-BLO 110V.A.C.
3A A/S FUSE
MAINS
ORANGE 120WATT GRAPHIC MK II
NOTE: THE 80 WATT UNIT IS IDENTICAL, BUT HAS ONLY 2 EL34
10th JAN 1974
Musonic Inc.
Marketing and Sales to the Music Industry
1271 RAND ROAD, DES PLAINES, ILLINOIS 60018

120w GRAPHIC MK II (ALT. DIAGRAM)

Orange

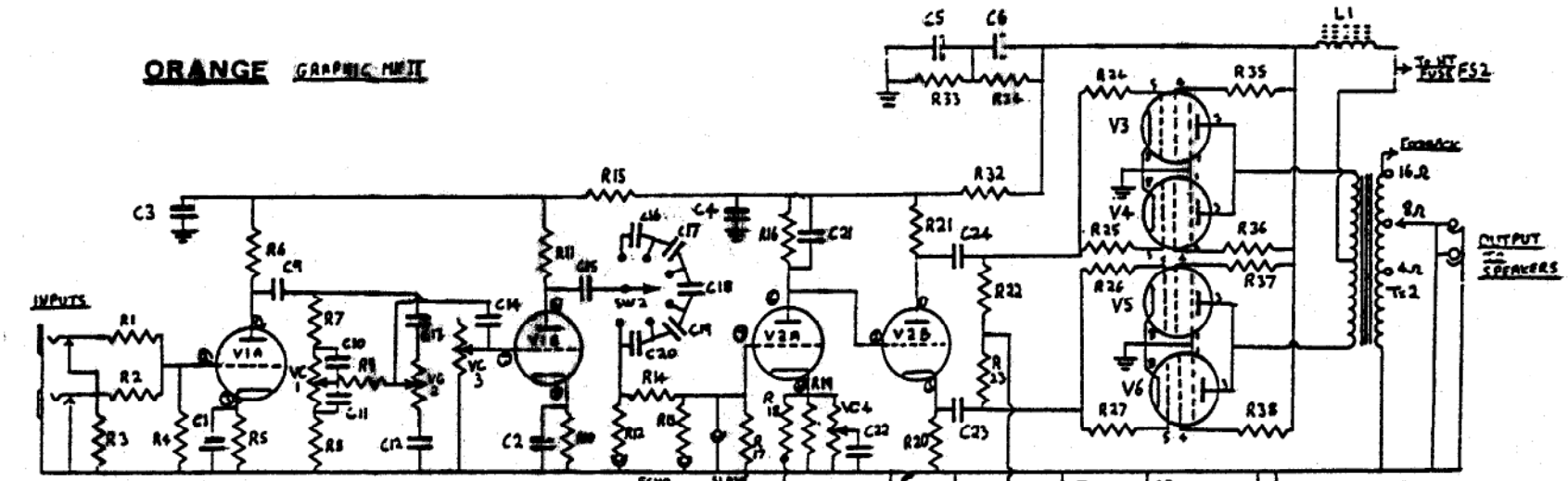

PARTS

R 1	68K ½ w. 1% Stability	R 20	100K ½ 1%	C1	47mfd 18V Electrolytic	C18	2200 pf 160V
2	68K " "	21	100K " "	2	47 " 18V "	19	4700 pf 160V
3	1M " "	22	220K " "	3	16 " 450V "	20	4700 pf 160V
4	220K " "	23	220K " "	4	16 " 450V "	21	1000 pf 500V
5	2K2 " "	24	2K2 " "	5	33 " 450V "	22	0·47 mfd 100V
6	220K " "	25	2K2 " "	6	33 " 450V "	23	0·068 mfd 400V
7	100K " "	26	2K2 " "	7	10 " 160V "	24	0·068 mfd 400V
8	22K " "	27	2K2 " "	8	10 " 160V "	25	100 mfd 450V
9	100K " "	28	33K " "	9	0·068 mfd 400V	26	100 mfd 450V
10	2K2 " "	29	100K " "	10	2200 pf 160V		
11	220K " "	30	15K " "	11	0·01 mfd 400V	D1-99	IN 4005
12	100K " "	31	22K " "	12	2200 pf 160V	Tx 1	Mains Transformer
13	100K " "	32	33K 1W "	13	330 pf 160V	Tx 2	Output Transformer
14	100K " "	33	100K 1W "	14	330 pf 160V	L1	HT Choke
15	33K 1W "	34	100K 1W "	15	0·068 mfd 400V	FS1	3A Anti Surge Mains Fuse (5A at 115V)
16	390K ½ w "	35	1K 5W wire wound	16	330 pf 160V	FS2	1A HT Fuse
17	220K " "	36	1K " "	17	1000 pf 160V		
18	15K " "	37	1K " "				
19	1K5 " "	38	1K " "				

V1A-B	ECC 83	SW1	Double Pole Mains Switch	VC1	1MΩ Log for Bass	VR1	100K Preset (Set Bias)
V2A-B	ECC 83	SW2	2 Pole 6 way F.A.C. Switch	VC2	1MΩ " " Treble	VR2	100R " (Set min hum)
V3→6	EL 34			VC3	1MΩ " " Volume		
				VC4	1KΩ Lin " Boost		

NB. 80 watt version identical but Tx2 different and V3 & 6 R 24, 27, 36, 38 omitted

ORANGE MUSICAL INDUSTRIES LIMITED

17 Upland Road, Bexleyheath, Kent. Telephone: 01-304 6717

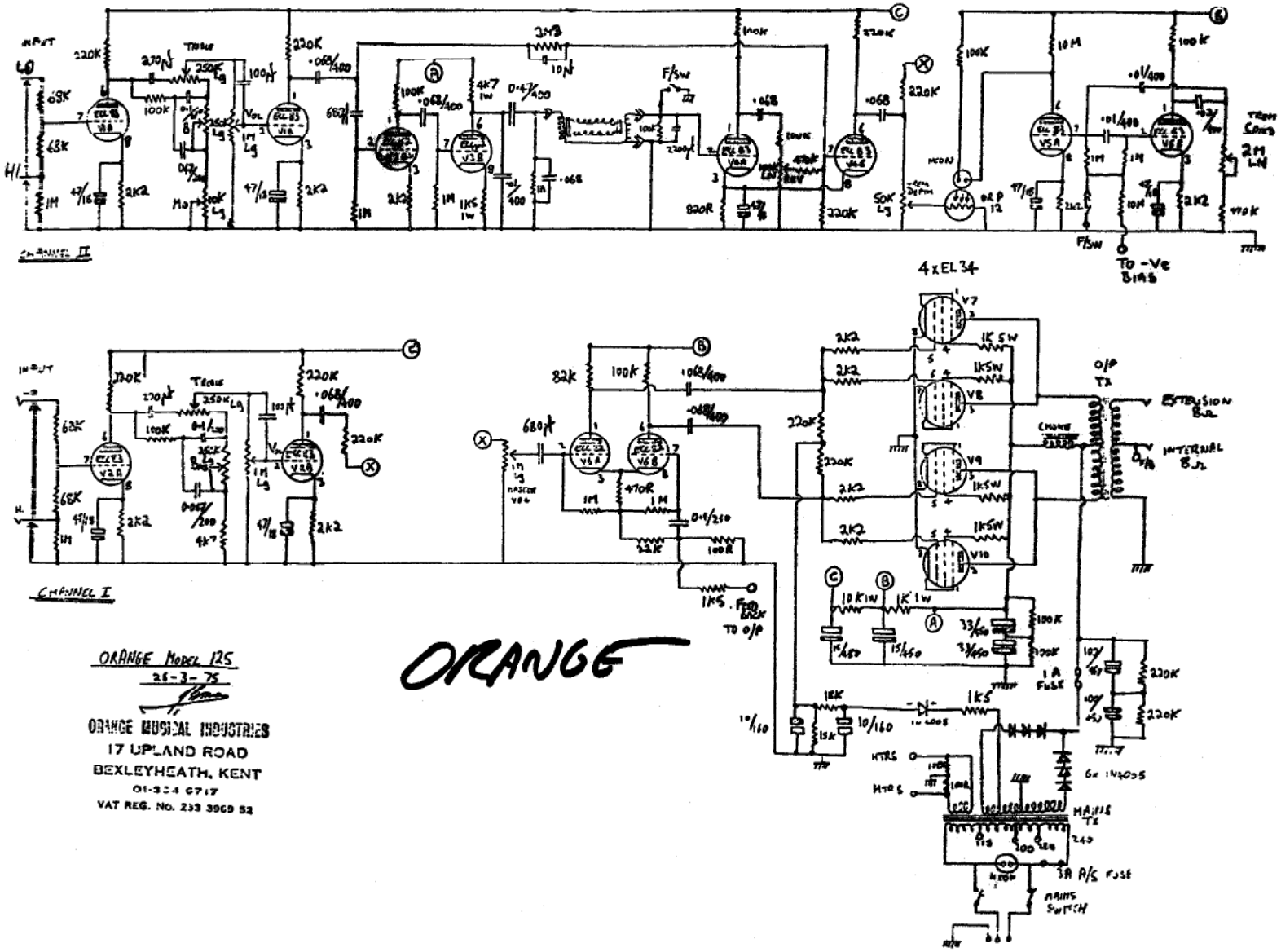
CHANNEL II
CHANNEL I
4 x EL34
To -Ve Bias
ORANGE
ORANGE MODEL 12S
26-3-75
ORANGE MUSICAL INDUSTRIES
17 UPLAND ROAD
BEXLEYHEATH, KENT
01-304 0717
VAT REG. No. 233 3969 52