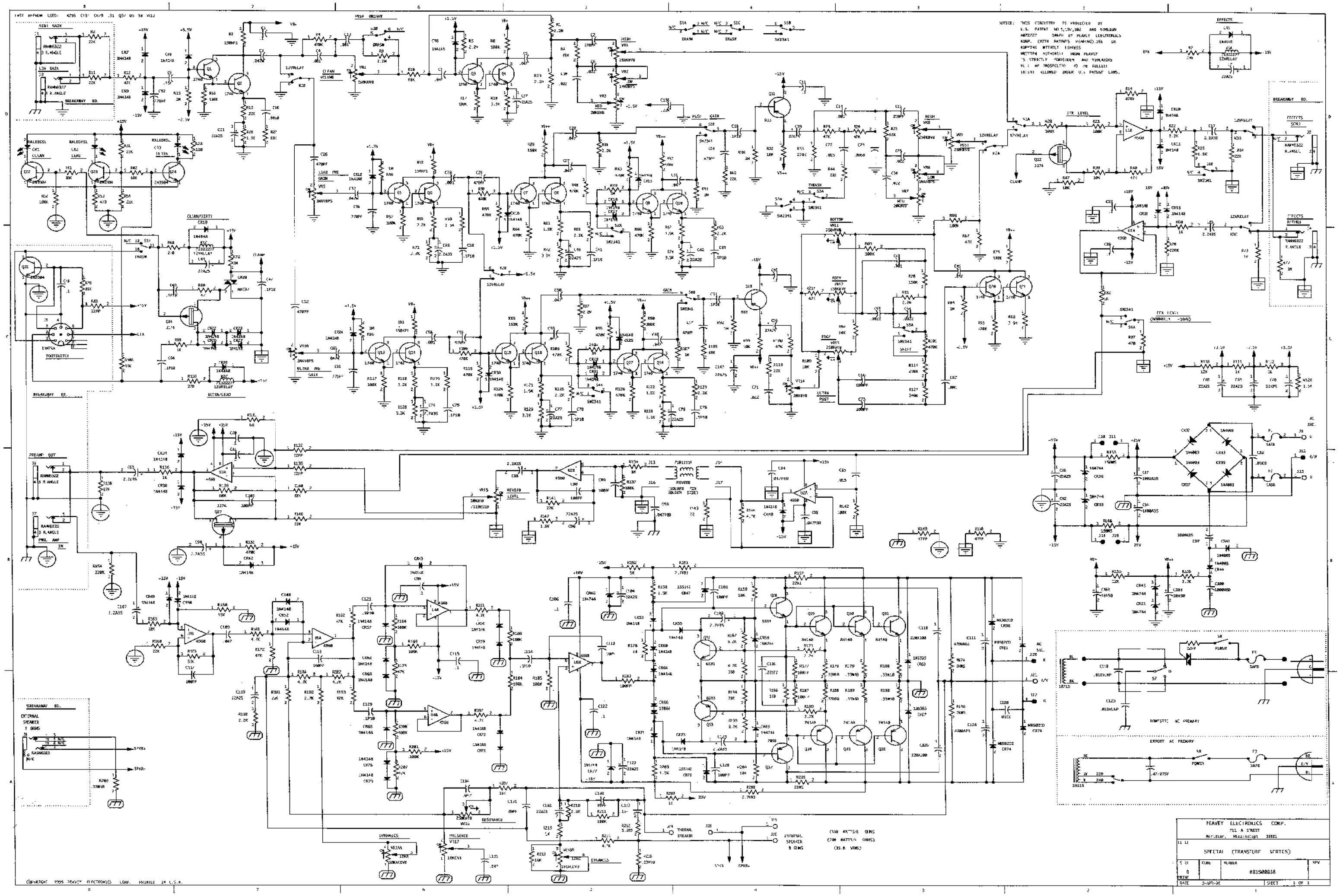

PEAVEY ELECTRONICS CORP.
711 A STREET
Meridian, Mississippi 39321
SPECIAL (TRANSTUBE SERIES)
CODE
NUMBER
REV
0
DATE
SHEET 1 OF 1

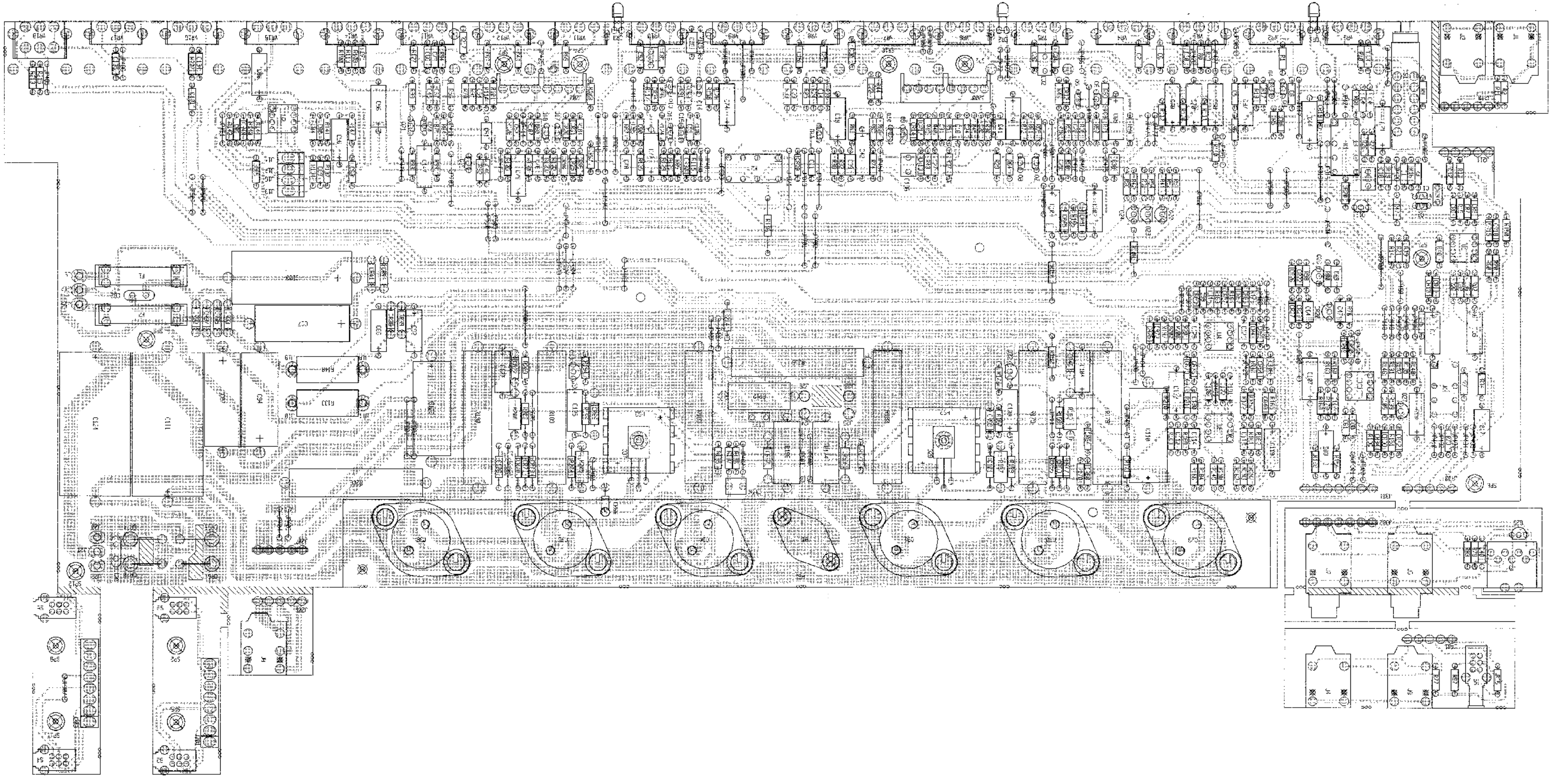

BOARD NAME: SPECIAL TRANSTUBE

** QTY.	PART NAME	VALUE	PART NUMBER	DESCRIPTION AND DEVICE DESIGNATIONS **********
1	.1	.1	70340100	.1MFùù±80-20%ù50VDCùùAXLùùT&R C1
1	270PF	270PF	70340057	270PFùù10%ùù50VDCùùT/CùùT&R C2
1	.047M	.047M	70330136	.047M 5% 50vdc my T&A C3
1	.001	.001	70340000	.001MFùù10%ùù50VDCùùMONùùT&R C4
1	.047	.047	70340017	.047MFùù10%ùù50VDCùùMONùùT&R C5
1	.022	.022	70340012	.022MFùù10%ùù50VDCùùMONùùT&R C6
1	22A25	22A25	70320012	22MFD +/-20% 25VDC EL AXL C7
1	.047	.047	70340017	.047MFùù10%ùù50VDCùùMONùùT&R C8
1	.1SF	.1SF	70330113	0.10 MFD 10% 100V STCK FILM T&A C9
1	.022	.022	70340012	.022MFùù10%ùù50VDCùùMONùùT&R C10
1	.1	.1	70340100	.1MFùù+80-20%ù50VDCùùAXLùùT&R C11
1	270PF	270PF	70340057	270PFùù10%ùù50VDCùùT/CùùT&R C12
2	.001	.001	70340000	.001MFùù10%ùù50VDCùùMONùùT&R C13, C14
1	270PF	270PF	70340057	270PFùù10%ùù50VDCùùT/CùùT&R C15
1	.0068	.0068	70340008	.0068MFùù10%ùù50VDCùùMONùùT&R C16
1	2.2A35	2.2A35	70320200	2.2MFD 35VDC LY.CAP T&R C17
1	.1P10	.1P10	70340101	.1MFùùù10%ùù50VDCùùMONùùT&R C18
1	22A25	22A25	70320012	22MFD +/-20% 25VDC EL AXL C19
1	.047	.047	70340017	.047MFùù10%ùù50VDCùùMONùùT&R C20
1	22A25	22A25	70320012	22MFD +/-20% 25VDC EL AXL C21
1	.015	.015	70340010	.015MFùù10%ùù50VDCùùT/CùùT&R C22
1	.0068	.0068	70340008	.0068MFù10%ùù50VDCùùMONùùT&R C23
1	470PF	470PF	70340058	470PFùù10%ùù50VDCùùT/CùùT&R C24
1	.022	.022	70340012	.022MFùù10%ùù50VDCùùMONùùT&R C25
1	470PF	470PF	70340058	470PFùù10%ùù50VDCùùT/CùùT&R C26
1	.047	.047	70340017	.047MFùù10%ùù50VDCùùMONùùT&R C27
1	.001	.001	70340000	.001MFùù10%ùù50VDCùùMONùùT&R C28
1	470PF	470PF	70340058	470PFùù10%ùù50VDCùùT/CùùT&R C29
1	.022	.022	70340012	.022MFùù10%ùù50VDCùùMONùùT&R C30
1	.047	.047	70340017	.047MFùù10%ùù50VDCùùMONùùT&R C31
1	.047M	.047M	70330136	.047M 5% 50vdc my T&A C32
1	.1	.1	70340100	.1MFùù+80-20%ù50VDCùùAXLùùT&R C33
1	270PF	270PF	70340057	270PFùù10%ùù50VDCùùT/CùùT&R C34
1	2.2A35	2.2A35	70320200	2.2MFD 35VDC LY.CAP T&R C35
1	.1	.1	70340100	.1MFùù+80-20%ù50VDCùùAXLùùT&R C36
1	22A25	22A25	70320012	22MFD +/-20% 25VDC EL AXL C37
2	.1P10	.1P10	70340101	.1MFùùù10%ùù50VDCùùMONùùT&R C38, C39
1	22A25	22A25	70320012	22MFD +/-20% 25VDC EL AXL C40
1	.1P10	.1P10	70340101	.1MFùùù10%ùù50VDCùùMONùùT&R C41
1	22A25	22A25	70320012	22MFD +/-20% 25VDC EL AXL C42
1	.001	.001	70340000	.001MFùù10%ùù50VDCùùMONùùT&R C43
1	22A25	22A25	70320012	22MFD +/-20% 25VDC EL AXL C44
1	.047	.047	70340017	.047MFùù10%ùù50VDCùùMONùùT&R C45
1	.1	.1	70340100	.1MFùù+80-20%ù50VDCùùAXLùùT&R C46
1	.1P10	.1P10	70340101	.1MFùùù10%ùù50VDCùùMONùùT&R C47
1	.1	.1	70340100	.1MFùù-80-20%ù50VDCùùAXLùùT&R C48
1	.1P10	.1P10	70340101	.1MFùùù10%ùù50VDCùùMONùùT&R C49
1	.047	.047	70340017	.047MFùù10%ùù50VDCùùMONùùT&R C50
1	.1P10	.1P10	70340101	.1MFùùù10%ùù50VDCùùMONùùT&R C51
1	470PF	470PF	70340058	470PFùù10%ùù50VDCùùT/CùùT&R C52
2	.0022	.0022	70340004	.0022MFù10%ùù50VDCùùT/CùùT&R C53, C54
1	.047	.047	70340017	.047MFùù10%ùù50VDCùùMONùùT&R C55
1	22A25	22A25	70320012	22MFD +/-20% 25VDC EL AXL C56
1	470PF	470PF	70340058	470PFùù10%ùù50VDCùùT/CùùT&R C57
1	.001	.001	70340000	.001MFùù10%ùù50VDCùùMONùùT&R C58
1	470PF	470PF	70340058	470PFùù10%ùù50VDCùùT/CùùT&R C59
1	.047	.047	70340017	.047MFùù10%ùù50VDCùùMONùùT&R C60
1	.047M	.047M	70330136	.047M 5% 50vdc my T&A C63
1	.1P10	.1P10	70340101	.1MFùùù10%ùù50VDCùùMONùùT&R C64
1	2.2A35	2.2A35	70320200	2.2MFD 35VDC LY.CAP T&R C65
1	100PF	100PF	70340054	100PFùù10%ùù50VDCùùT/CùùT&R C66
1	.001	.001	70340000	.001MFùù10%ùù50VDCùùMONùùT&R C67
3	22A25	22A25	70320012	22MFD +/-20% 25VDC EL AXL C68, C69, C70
1	.022	.022	70340012	.022MFùù10%ùù50VDCùùMONùùT&R C71
1	100PF	100PF	70340054	100PFùù10%ùù50VDCùùT/CùùT&R C73
1	2.2A35	2.2A35	70320200	2.2MFD 35VDC LY.CAP T&R C74
2	.1P10	.1P10	70340101	.1MFùùù10%ùù50VDCùùMONùùT&R C75, C76
1	22A25	22A25	70320012	22MFD +/-20% 25VDC EL AXL C77
1	.1P10	.1P10	70340101	.1MFùùù10%ùù50VDCùùMONùùT&R C78
1	22A25	22A25	70320012	22MFD +/-20% 25VDC EL AXL C79
2	.1	.1	70340100	.1MFùù+80-20%ù50VDCùùAXLùùT&R C80, C81
1	.01CD	.01CD	70320248	.01MFùù20%ù1000VDCùCDùT&A C82
1	2.2A35	2.2A35	70320200	2.2MFD 35VDC LY.CAP T&R C83
1	.047P80	.047P80	70340016	.047MFù+80-20%ù50VDCùùMONùùT&R C84
1	.015	.015	70340010	.015MFùù10%ùù50VDCùùT/CùùT&R C85
1	22A25	22A25	70320012	22MFD +/-20% 25VDC EL AXL C86
1	1000A35	1000A35	70320038	1000 MFD 35VDC LYTIC CAP C87
1	2.2A35	2.2A35	70320200	2.2MFD 35VDC LY.CAP T&R C88
2	100PF	100PF	70340054	100PFùù10%ùù50VDCùùT/CùùT&R C89, C90
1	270PF	270PF	70340057	270PFùù10%ùù50VDCùùT/CùùT&R C91
1	22A25	22A25	70320012	22MFD +/-20% 25VDC EL AXL C92
1	.047P80	.047P80	70340016	.047MFù+80-20%ù50VDCùùMONùùT&R C93
1	1000A35	1000A35	70320038	1000 MFD 35VDC LYTIC CAP C94
1	.047P80	.047P80	70340016	.047MFù+80-20%ù50VDCùùMONùùT&R C95
1	22A25	22A25	70320012	22MFD +/-20% 25VDC EL AXL C96
1	1000A35	1000A35	70320038	1000 MFD 35VDC LYTIC CAP C97
1	2.2A35	2.2A35	70320200	2.2MFD 35VDC LY.CAP T&R C98
1	.1	.1	70340100	.1MFùù-80-20%ù50VDCùùAXLùùT&R C99
1	1000A50	1000A50	70320026	1000MF - 50VDC EL - AXL C100
1	100PF	100PF	70340054	100PFùù10%ùù50VDCùùT/CùùT&R C101
2	10A50	10A50	70320112	10MFD 50V T&R C102, C103
1	22A25	22A25	70320012	22MFD +/-20% 25VDC EL AXL C104
1	100PF	100PF	70340054	100PFùù10%ùù50VDCùùT/CùùT&R C105
1	.1	.1	70340100	.1MFùù+80-20%ù50VDCùùAXLùùT&R C106
2	2.2A35	2.2A35	70320200	2.2MFD 35VDC LY.CAP T&R C107, C108
1	.047	.047	70340017	.047MFùù10%ùù50VDCùùMONùùT&R C109
1	220A100	220A100	70320017	220 MFD 100VDC LYTIC CAP C110
1	4700A63	4700A63	70340102	4700 MFD 63VDC LYTIC CAP C111
1	10PF	10PF	70340050	10PFùùù5%ùùùùùùT/CùùT&R C112
1	100PF	100PF	70340034	100PFùù10%ùù50VDCùùT/CùùT&R C113
1	.1P10	.1P10	70340101	.1MFùùù10%ùù50VDCùùMONùùT&R C114
1	.1	.1	70340100	.1MFùù+80-20%ù50VDCùùAXLùùT&R C115
1	.22SF2	.22SF2	70330114	0.22 MF 5% 100V STCK FILM T&A C116
1	100PF	100PF	70340054	100PFùù10%ùù50VDCùùT/CùùT&R C117
1	22A25	22A25	70320012	22MFD +/-20% 25VDC EL AXL C119
1	.01CD	.01CD	70320248	.01MFùù20%ù1000VDCùCDùT&A C120
1	.1P10	.1P10	70340101	.1MFùùù10%ùù50VDCùùMONùùT&R C121
1	.1	.1	70340100	.1MFùù+80-20%ù50VDCùùAXLùùT&R C122
1	4700A63	4700A63	70340102	4700 MFD 63VDC LYTIC CAP C124
1	2.2A35	2.2A35	70320200	2.2MFD 35VDC LY.CAP T&R C125
1	220A100	220A100	70320017	220 MFD 100VDC LYTIC CAP C126
1	22A25	22A25	70320012	22MFD +/-20% 25VDC EL AXL C127
1	100PF	100PF	70340054	100PFùù10%ùù50VDCùùT/CùùT&R C128
1	.1P10	.1P10	70340101	.1MFùùù10%ùù50VDCùùMONùùT&R C129
2	39PF	39PF	70340052	39PFùùùùùù50VDCùùT/CùùT&R C130, C131
1	22A25	22A25	70320012	22MFD +/-20% 25VDC EL AXL C132
1	.1SF	.1SF	70330113	0.10 MFD 10% 100V STCK FILM T&A C133
2	.047	.047	70340017	.047MFùù10%ùù50VDCùùMONùùT&R C134, C135
1	.22M	.22M	70330128	.22M 5% 50vdc my T&A C136
1	22A25	22A25	70320012	22MFD +/-20% 25VDC EL AXL C147
1	RALEDGSL	RALEDGSL	70450054	LED, T-1, GRN, W/STOPPER LEAD T&A CR1
1	RALEDYSL	RALEDYSL	70450055	LED, T-1, YEL, W/STOPPER LEAD T&A CR2
1	RALEDRSL	RALEDRSL	70450053	LED, T-1, RED, W/STOPPER LEAD T&A CR3
15	1N4148	4148	70464148	1N4148 75V 10MA SILICON DIODE CR5, CR6, CR7, CR8, CR9, CR10, CR11, CR12, CR13, CR14, CR15, CR16, CR17, CR18, CR19
1	MAC97	MAC97	70460097	MAC97-6 400V .6A TO-92 TRIAC T&A CR20
10	1N4148	4148	70464148	1N4148 75V 10MA SILICON DIODE CR22, CR23, CR24, CR25, CR26, CR27, CR28, CR29, CR30, CR31
2	1N4003	1N4003	70464003	1N4003 200V SILICON DIODE CR32, CR33
1	1N4148	4148	70464148	1N4148 75V 10MA SILICON DIODE CR34
1	1N4003	1N4003	70464003	1N4003 200V SILICON DIODE CR35
1	1N4744	4744	70440102	SZG40102 15V 5% ZENER DIODE CR36
1	1N4003	1N4003	70464003	1N4003 200V SILICON DIODE CR37
1	1N4148	4148	70464148	1N4148 75V 10MA SILICON DIODE CR38
1	1N4744	4744	70440102	SZG40102 15V 5% ZENER DIODE CR39
1	1N4148	4148	70464148	1N4148 75V 10MA SILICON DIODE CR40
1	1N4003	1N4003	70464003	1N4003 200V SILICON DIODE CR41
2	1N4148	4148	70464148	1N4148 75V 10MA SILICON DIODE CR42, CR43
1	1N4003	1N4003	70464003	1N4003 200V SILICON DIODE CR44
2	1N4744	4744	70440102	SZG40102 15V 5% ZENER DIODE CR45, CR46
1	1SS142	1SS142	70400142	1ss142 250v SILICON DIODE CR47
3	1N4148	4148	70464148	1N4148 75V 10MA SILICON DIODE CR48, CR49, CR50

1	1N4744	4744	70440102	SZG40102 15V 5% ZENER DIODE CR51	1	933	933	70400933	2SA933ASLN 40V, .1A, PNP, LOW NOISE T&A Q11	1	10K	10K	70240025	10Kù1/4W±5%ùùCFùT&R R39
4	1N4148	4148	70464148	1N4148 75V 10MA SILICON DIODE CR52, CR53, CR54, CR55	1	J174	J174	70460174	J-174 30V TO-92 P-CHAN FET T&A Q12	1	47K	47K	70240031	47Kù1/4W±5%ùùCFùT&R R40
1	MR502CD	MR502CD	70400502	MR502/1N5402 200V, 3A SILICON DIODE CATH DOWN CR56	6	1740	1740	70401740	2SC1740SLN 40V,.1A, NPK, LOW NOISE T&A Q13, Q14, Q15, Q16, Q17, Q18	2	10K	10K	70240025	10Kù1/4W±5%ùùCFùT&R R41, R42
1	1N4148	4148	70464148	1N4148 75V 10MA SILICON DIODE CR57	1	933	933	70400933	2SA933ASLN 40V, .1A, PNP, LOW NOISE T&A Q19	1	470K	470K	70240038	470Kù1/4W±5%ùùCFùT&R R43
1	1N4744	4744	70440102	SZG40102 15V 5% ZENER DIODE CR58	2	1740	1740	70401740	2SC1740SLN 40V,.1A, NPN, LOW NOISE T&A Q20, Q21	2	22K	22K	70240029	22Kù1/4W±5%ùùCFùT&R R44, R45
2	1N4148	4148	70464148	1N4148 75V 10MA SILICON DIODE CR59, CR60	4	2N3904	3904	70403904	3904/SPS7238 TO 92 NPN T&A Q22, Q23, Q24, Q25	1	1M	1M	70240039	1Mùù1/4W±5%ùùCFùT&R R46
1	MR502CD	MR502CD	70400502	MR502/1N5402 200V, 3A SILICON DIODE CATH DOWN CR61	2	J174	J174	70460174	J-174 30V TO-92 P-CHAN FET T&A Q26, Q27	1	10K	10K	70240025	10Kù1/4W±5%ùùCFùT&R R47
1	1N4148	4148	70464148	1N4148 75V 10MA SILICON DIODE CR62	1	5331	5331	70405331	SJE-5331 CASE-77 NPN Q28	1	470K	470K	70240038	470Kù1/4W±5%ùùCFùT&R R48
1	1N5393	5393	70465393	1N5393-RL 200V, 1.5, 5% DIODE -T&R CR63	3	84140	84140	70484140	SJ-84140 NPN 4A 140 V TO-3 Q29, Q30, Q31	1	1M	1M	70240039	1Mùù1/4W±5%ùùCFùT&R R49
2	1N4148	4148	70464148	1N4148 75V 10MA SILICON DIODE CR64, CR65	1	6531	6531	70466531	MPS-6531 TO92 NPN TRANS. T&A Q32	1	470K	470K	70240038	470Kù1/4W±5%ùùCFùT&R R50
1	13886	13886	70413886	SX-13886-2 DUAL DIODE CR66	1	6533	6534	70466533	MPS-6533/34 TO-92 PNP TRNS T&A Q33	1	1M	1M	70240039	1Mùù1/4W±5%ùùCFùT&R R51
1	1N5393	5393	70465393	1N5393-RL 200V, 1.5, 5% DIODE -T&R CR67	3	74140	74140	70474140	SJ-74140 PNP 4A 140V TO-3 Q34, Q35, Q36	1	100K	100K	70240034	100Kù1/4W±5%ùùCFùT&R R52
1	1N4148	4148	70464148	1N4148 75V 10MA SILICON DIODE CR68	1	7036	7036	70407036	SJE-7036 CASE-77 PNP XSISTOR Q37	1	470	470	70240015	470ù1/4W±5%ùùCFùT&R R53
1	1N4744	4744	70440102	SZG40102 15V 5% ZENER DIODE CR69	1	2.2M	2.2M	70240040	2.2Mù1/4W±5%ùùCFùT&R R1	1	22K	22K	70240029	22Kù1/4W±5%ùùCFùT&R R54
1	MR502CD	MR502CD	70400502	MR502/1N5402 200V, 3A SILICON DIODE CATH DOWN CR70	1	22K	22K	70240029	22Kù1/4W±5%ùùCFùT&R R2	1	470K	470K	70240038	470Kù1/4W±5%ùùCFùT&R R55
3	1N4148	4148	70464148	1N4148 75V 10MA SILICON DIODE CR71, CR72, CR73	1	150KPI	150KPI	70241035	150Kù1/4W±1%ùùMFùT&R R3	2	100K	100K	70240034	100Kù1/4W±5%ùùCFùT&R R56, R57
1	MR502CD	MR502CD	70400502	MR502/1N5402 200V, 3A SILICON DIODE CATH DOWN CR74	1	470K	470K	70240038	470Kù1/4W±5%ùùCFùT&R R4	1	2.2K	2.2K	70240020	2.2Kù1/4W±5%ùùCFùT&R R58
2	1N4148	4148	70464148	1N4148 75V 10MA SILICON DIODE CR75, CR76	1	2.2M	2.2M	70240040	2.2Mù1/4W±5%ùùCFùT&R R5	1	1.5K	1.5K	70240018	1.5Kù1/4W±5%ùùCFùT&R R59
1	1N4744	4744	70440102	SZG40102 15V 5% ZENER DIODE CR77	1	100K	100K	70240034	100Kù1/4W±5%ùùCFùT&R R6	1	1K	1K	70240017	1Kùù1/4W±5%ùùCFùT&R R60
1	1SS142	1SS142	70400142	1ss142 250v SILICON DIODE CR78	1	270	270	70240013	270ù1/4W±5%ùùCFùT&R R7	2	1.5K	1.5K	70240018	1.5Kù1/4W±5%ùùCFùT&R R61, R62
1	1N4148	4148	70464148	1N4148 75V 10MA SILICON DIODE CR79	1	68K	68K	70240032	68Kù1/4W±5%ùùCFùT&R R8	1	2.2K	2.2K	70240020	2.2Kù1/4W±5%ùùCFùT&R R63
2	1ASB	1ASB	70900379	1 AMP S/B FUSE W/1H 2 FUSECLIPS #70900816 F1, F2	1	2.2M	2.2M	70240040	2.2Mù1/4W±5%ùùCFùT&R R9	1	470K	470K	70240038	470Kù1/4W±5%ùùCFùT&R R64
1	HS2828	98002828	98002828	SPECIAL TRANSTUBE HEATSINK HS1	1	68K	68K	70240032	68Kù1/4W±5%ùùCFùT&R R10	1	2.2K	2.2K	70240020	2.2Kù1/4W±5%ùùCFùT&R R65
2	HS2522	98002522	98002522	3/8" HEATSINK PUNCHED HS2, HS3	1	22K	22K	70240029	22Kù1/4W±5%ùùCFùT&R R11	1	470K	470K	70240038	470Kù1/4W±5%ùùCFùT&R R66
4	RAMN5322	71466322	71466322	JACK MONO R/A 1/4" 6.5MM NINS J1, J2, J3, J4	1	47K	47K	70240031	47Kù1/4W±5%ùùCFùT&R R12	1	47K	47K	70240031	47Kù1/4W±5%ùùCFùT&R R67
1	DIN7RA	71466226	71466226	CONN 7P R/A PCMNT DIN W/ 4 MNT. HOLES J5	1	2.2M	2.2M	70240040	2.2Mù1/4W±5%ùùCFùT&R R13	1	270	270	70240013	270ù1/4W±5%ùùCFùT&R R68
2	RAMN5322	71466322	71466322	JACK MONO R/A 1/4" 6.5MM NINS J6, J7	1	470K	470K	70240038	470Kù1/4W±5%ùùCFùT&R R14	1	100K	100K	70240034	100Kù1/4W±5%ùùCFùT&R R69
1	RASN5323	71466323	71466323	JACK STEREO R/A 1/4" 6.5MM NINS J8	1	1M	1M	70240039	1Mùù1/4W±5%ùùCFùT&R R15	1	220K	220K	70240036	220Kù1/4W±5%ùùCFùT&R R70
1	FMPU	73711811	73711811	M118-171 C.B. FEMALE MOLEX PIN J9	2	100K	100K	70240034	100Kù1/4W±5%ùùCFùT&R R16, R17	2	3.3K	3.3K	70240022	3.3Kù1/4W±5%ùùCFùT&R R71, R72
3	MMPU	73711812	73711812	R93-12 PN C.B. MALE MOLEX PIN J10, J11, J12	1	3.3K	3.3K	70240022	3.3Kù1/4W±5%ùùCFùT&R R18	1	1M	1M	70240039	1Mùù1/4W±5%ùùCFùT&R R73
2	SPX1D	SPX1D	73717003	1 STAKE PIN J13, J14	1	22K	22K	70240029	22Kù1/4W±5%ùùCFùT&R R19	1	3.3K	3.3K	70240022	3.3Kù1/4W±5%ùùCFùT&R R74
1	FMPU	73711811	73711811	M118-171 C.B. FEMALE MOLEX PIN J15	2	100K	100K	70240034	100Kù1/4W±5%ùùCFùT&R R20, R21	1	100K	100K	70240034	100Kù1/4W±5%ùùCFùT&R R75
2	SPX1D	SPX1D	73717003	1 STAKE PIN J16, J17	1	3.3K	3.3K	70240022	3.3Kù1/4W±5%ùùCFùT&R R22	2	1M	1M	70240039	1Mùù1/4W±5%ùùCFùT&R R76, R77
3	MMPU	73711812	73711812	R93-12 PN C.B. MALE MOLEX PIN J18, J19, J20	2	47K	47K	70240031	47Kù1/4W±5%ùùCFùT&R R23, R24	1	150K	150K	70240035	150Kù1/4W±5%ùùCFùT&R R78
1	FMPU	73711811	73711811	M118-171 C.B. FEMALE MOLEX PIN J21	1	68K	68K	70240032	68Kù1/4W±5%ùùCFùT&R R25	1	15K	15K	70240027	15Kù1/4W±5%ùùCFùT&R R79
1	MMPU	73711812	73711812	R93-12 PN C.B. MALE MOLEX PIN J22	1	1.5K	1.5K	70240018	1.5Kù1/4W±5%ùùCFùT&R R26	1	47	47	70240008	47ùù1/4W±5%ùùCFùT&R R80
1	WJ8YL14	WJ8YL14	91015149	YL-18G-14"-CPT-2058PD J23	1	68K	68K	70240032	68Kù1/4W±5%ùùCFùT&R R27	1	2.2M	2.2M	70240040	2.2Mù1/4W±5%ùùCFùT&R R81
2	WJ8BK4SP	WJ8BK4SP	91090271	BK-18G-4"-CPT-2058PD/RA J24, J25	1	150	150	70240001	150ù1/4W±5%ùùCFùT&R R28	1	1K	1K	70240017	1Kùù1/4W±5%ùùCFùT&R R82
1	WJ8BL14	WJ8BL14	91014148	BL-18G-14"-CPT-2058PD J26	1	150K	150K	70240035	150Kù1/4W±5%ùùCFùT&R R29	1	22PF	22PF	70241100	22PFù1/4W±5%ùùPFùù R83
1	TESPX8	73719048	73719048	8 POS. TOE ENTRY CON TRIFE .156 J200	1	2.2M	2.2M	70240040	2.2Mù1/4W±5%ùùCFùT&R R30	1	1M	1M	70240039	1Mùù1/4W±5%ùùCFùT&R R84
1	8PHDR	73719094	73719094	8 PIN HDR 1" TALL .156" SP J201	1	22K	22K	70240029	22Kù1/4W±5%ùùCFùT&R R31	1	150K	150K	70240035	150Kù1/4W±5%ùùCFùT&R R85
1	TESPX8	73719048	73719048	8 POS. TOE ENTRY CON TRIFE .156 J202	1	10K	10K	70240025	10Kù1/4W±5%ùùCFùT&R R32	1	2.2M	2.2M	70240040	2.2Mù1/4W±5%ùùCFùT&R R87
1	8PHDR	73719094	73719094	8 PIN HDR 1" TALL .156" SP J203	1	220K	220K	70240036	220Kù1/4W±5%ùùCFùT&R R33	1	3.9K	3.9K	70241093	3.9Kù1/4W±5%ùùCFùAXL R88
4	5CJMP3	70600029	70600029	5 CONDUCTOR - 3" JUMPER CABLE - .156 CTRS. J206, J207, J210 J211	1	22K	22K	70240029	22Kù1/4W±5%ùùCFùT&R R34	1	100K	100K	70240034	100Kù1/4W±5%ùùCFùT&R R90
2	7CJMP3	70600030	70600030	7 CONDUCTOR - 3" JUMPER CABLE - .156 CTRS. J301, J302	1	1.5K	1.5K	70240018	1.5Kù1/4W±5%ùùCFùT&R R35	1	150KPI	150KPI	70241035	150Kù1/4W±1%ùùMFùT&R R91
2	5CJMP3	70600029	70600029	5 CONDUCTOR - 3" JUMPER CABLE - .156 CTRS. J400, J401	1	1M	1M	70240039	1Mùù1/4W±5%ùùCFùT&R R36	1	1M	1M	70240039	1Mùù1/4W±5%ùùCFùT&R R92
5	12VRELAY	71322277	71322277	DPST OMRON RELAY 12VDC K1, K2, K3	1	100K	100K	70240034	100Kù1/4W±5%ùùCFùT&R R37	1	470K	470K	70240038	470Kù1/4W±5%ùùCFùT&R R93
10	1740	1740	70401740	2SC1740SLN 40V,.1A, NPN, LOW NOISE T&A Q1, Q2, Q3, Q4, Q5, Q6, Q7, Q8, Q9, Q10	1	150KPI	150KPI	70241035	150Kù1/4W±1%ùùMFùT&R R38	1	10K	10K	70240025	10Kù1/4W±5%ùùCFùT&R R96

1	470K	470K	70240038	470Kù1/4Wù5%ùùCFùT&R	R95
1	1M	1M	70240039	1Mù1/4Wù5%ùùCFùT&R	R96
1	470	470	70240015	470ù1/4Wù5%ùùCFùT&R	R97
1	1K	1K	70240017	1Kùù1/4Wù5%ùùCFùT&R	R98
1	10K	10K	70240025	10Kù1/4Wù5%ùùCFùT&R	R99
1	47K	47K	70240031	47Kù1/4Wù5%ùùCFùT&R	R100
2	470K	470K	70240038	470Kù1/4Wù5%ùùCFùT&R	R101, R103
1	1M	1M	70240039	1Mùù1/4Wù5%ùùCFùT&R	R104
1	68K	68K	70240032	68Kù1/4Wù5%ùùCFùT&R	R105
1	470K	470K	70240038	470Kù1/4Wù5%ùùCFùT&R	R106
1	1M	1M	70240039	1Mùù1/4Wù5%ùùCFùT&R	R107
1	33K	33K	70240030	33Kù1/4Wù5%ùùCFùT&R	R108
1	10K	10K	70240025	10Kù1/4Wù5%ùùCFùT&R	R109
1	12K	12K	70240057	12Kù1/4Wù5%ùùCFùT&R	R110
2	1K	1K	70240017	1Kùù1/4Wù5%ùùCFùT&R	R111, R112
1	22K	22K	70240029	22Kù1/4Wù5%ùùCFùT&R	R113
1	220K	220K	70240036	220Kù1/4Wù5%ùùCFùT&R	R114
1	470K	470K	70240038	470Kù1/4Wù5%ùùCFùT&R	R115
1	270	270	70240013	270ù1/4Wù5%ùùCFùT&R	R116
1	100K	100K	70240034	100Kù1/4Wù5%ùùCFùT&R	R117
1	2.2K	2.2K	70240020	2.2Kù1/4Wù5%ùùCFùT&R	R118
4	1.5K	1.5K	70240018	1.5Kù1/4Wù5%ùùCFùT&R	R119, R120, R121, R122
1	2.2K	2.2K	70240020	2.2Kù1/4Wù5%ùùCFùT&R	R123
1	470K	470K	70240038	470Kù1/4Wù5%ùùCFùT&R	R124
1	2.2K	2.2K	70240020	2.2Kù1/4Wù5%ùùCFùT&R	R125
1	470K	470K	70240038	470Kù1/4Wù5%ùùCFùT&R	R126
1	240K	240K	70241094	240Kù1/4Wù5%ùùCFùT&R	R127
3	3.3K	3.3K	70240022	3.3Kù1/4Wù5%ùùCFùT&R	R128, R129, R130
1	68	68	70240009	68ùù1/4Wù5%ùùCFùT&R	R131
1	22PP	22PP	70240100	22PPù1/4Wù5%ùùPPùù	R132
1	150W5	150W5	70250040	150ù5Wù10%ùWWùAXL	R133
1	1K	1K	70240017	1Kùù1/4Wù5%ùùCFùT&R	R134
1	22PP	22PP	70240100	22PPù1/4Wù5%ùùPPùù	R135
1	1K	1K	70240017	1Kùù1/4Wù5%ùùCFùT&R	R136
1	100K	100K	70240034	100Kù1/4Wù5%ùùCFùT&R	R137
1	22K	22K	70240029	22Kù1/4Wù5%ùùCFùT&R	R138
1	68K	68K	70240032	68Kù1/4Wù5%ùùCFùT&R	R139
2	22K	22K	70240029	22Kù1/4Wù5%ùùCFùT&R	R140, R141
1	100K	100K	70240034	100Kù1/4Wù5%ùùCFùT&R	R142
1	22	22	70240007	22ùù1/4Wù5%ùùCFùT&R	R143
1	4.7K	4.7K	70240023	4.7Kù1/4Wù5%ùùCFùT&R	R144
1	22K	22K	70240029	22Kù1/4Wù5%ùùCFùT&R	R146
1	1.5K	1.5K	70240018	1.5Kù1/4Wù5%ùùCFùT&R	R147
1	150W5	150W5	70250040	150ù5Wù10%ùWWùAXL	R148
2	47PP	47PP	70240090	47PPù1/4Wù5%ùùPPùT&R	R149, R150
1	470K	470K	70240038	470Kù1/4Wù5%ùùCFùT&R	R151
1	1K	1K	70240017	1Kùù1/4Wù5%ùùCFùT&R	R152
1	2.7KW1	2.7KW1	70210016	2.7Kù1Wù5%ùùMOùT&R	R153

1	220K	220K	70240036	220Kù1/4Wù5%ùùCFùT&R	R154
1	12K	12K	70240057	12Kù1/4Wù5%ùùCFùT&R	R155
1	2.7K	2.7K	70240021	2.7Kù1/4Wù5%ùùCFùT&R	R156
1	22W1	22W1	70210001	22ùù1Wù5%ùùMOùT&R	R157
1	1.5K	1.5K	70240018	1.5Kù1/4Wù5%ùùCFùT&R	R158
1	18K	18K	70240028	18Kù1/4Wù5%ùùCFùT&R	R159
1	33K	33K	70240030	33Kù1/4Wù5%ùùCFùT&R	R160
1	4.7K	4.7K	70240023	4.7Kù1/4Wù5%ùùCFùT&R	R161
1	47K	47K	70240031	47Kù1/4Wù5%ùùCFùT&R	R162
1	22K	22K	70240029	22Kù1/4Wù5%ùùCFùT&R	R163
1	100K	100K	70240034	100Kù1/4Wù5%ùùCFùT&R	R164
1	4.7K	4.7K	70240023	4.7Kù1/4Wù5%ùùCFùT&R	R165
1	100K	100K	70240034	100Kù1/4Wù5%ùùCFùT&R	R166
1	8.2K	8.2K	70240049	8.2Kù1/4Wù5%ùùCFùT&R	R167
1	22K	22K	70240029	22Kù1/4Wù5%ùùCFùT&R	R168
1	100K	100K	70240034	100Kù1/4Wù5%ùùCFùT&R	R169
1	33	33	70240004	33ùù1/4Wù5%ùùCFùT&R	R170
1	2.2K	2.2K	70240020	2.2Kù1/4Wù5%ùùCFùT&R	R171
1	47K	47K	70240031	47Kù1/4Wù5%ùùCFùT&R	R172
1	33K	33K	70240030	33Kù1/4Wù5%ùùCFùT&R	R173
1	2kW5	2kW5	70250063	2Kù5Wù10%ùWWùAXL	R174
1	47K	47K	70240031	47Kù1/4Wù5%ùùCFùT&R	R175
1	330	330	70240014	330ù1/4Wù5%ùùCFùT&R	R176
1	100PP	100PP	70240096	100PP-1/4Wù5%ùùPPùT&R	R177
3	.33W10	.33W10	70250011	.33ù10Wù10%ùWWùAXL	R178, R179, R180
2	4.7K	4.7K	70240023	4.7Kù1/4Wù5%ùùCFùT&R	R181, R182
1	100PP	100PP	70240096	100PP-1/4Wù5%ùùPPùT&R	R183
2	100K	100K	70240034	100Kù1/4Wù5%ùùCFùT&R	R184, R185
1	180	180	70240012	180ù1/4Wù5%ùùCFùT&R	R186
1	100PP	100PP	70240096	100PP-1/4Wù5%ùùPPùT&R	R187
3	.33W10	.33W10	70250011	.33ù10Wù10%ùWWùAXL	R188, R189, R190
1	22K	22K	70240029	22Kù1/4Wù5%ùùCFùT&R	R191
1	2.7K	2.7K	70240021	2.7Kù1/4Wù5%ùùCFùT&R	R192
1	47K	47K	70240031	47Kù1/4Wù5%ùùCFùT&R	R193
1	330	330	70240014	330ù1/4Wù5%ùùCFùT&R	R194
1	2.2K	2.2K	70240020	2.2Kù1/4Wù5%ùùCFùT&R	R195
1	2kW5	2kW5	70250063	2Kù5Wù10%ùWWùAXL	R196
1	4.7K	4.7K	70240023	4.7Kù1/4Wù5%ùùCFùT&R	R197
1	2.2K	2.2K	70240020	2.2Kù1/4Wù5%ùùCFùT&R	R198
1	8.2K	8.2K	70240049	8.2Kù1/4Wù5%ùùCFùT&R	R199
2	100K	100K	70240034	100Kù1/4Wù5%ùùCFùT&R	R200, R201
1	47K	47K	70240031	47Kù1/4Wù5%ùùCFùT&R	R202
1	1.5K	1.5K	70240018	1.5Kù1/4Wù5%ùùCFùT&R	R203
1	18K	18K	70240028	18Kù1/4Wù5%ùùCFùT&R	R204
	22W1	22W1	70210001	22ùù1Wù5%ùùMOùT&R	R205
1	.33W10	.33W10	70250011	.33ù10Wù10%ùWWùAXL	R206
1	10K	10K	70240025	10Kù1/4Wù5%ùùCFùT&R	R207
1	2.7KW1	2.7KW1	70210016	2.7Kù1Wù5%ùùMOùT&R	R208

1	1K	1K	70240017	1Kùù1/4Wù5%ùùCFùT&R	R209
1	2.2K	2.2K	70240020	2.2Kù1/4Wù5%ùùCFùT&R	R210
1	100K	100K	70240034	100Kù1/4Wù5%ùùCFùT&R	R211
1	5.6W5	5.6W5	70250026	5.6ù5Wù10%ùWWùAXL	R212
1	1K	1K	70240017	1Kùù1/4Wù5%ùùCFùT&R	R213
1	4.7K	4.7K	70240023	4.7Kù1/4Wù5%ùùCFùT&R	R214
1	10K	10K	70240025	10Kù1/4Wù5%ùùCFùT&R	R215
1	.33W10	.33W10	70250011	.33ù10Wù10%ùWWùAXL	R216
1	47K	47K	70240031	47Kù1/4Wù5%ùùCFùT&R	R217
1	DRASW	DRASW	71322256	PC MNT SWITCH DUAL	S1
5	SW2341	SW2341	71322341	dpdt p/p r/a mini	S2, S3, S4, S5, S6
1	750SOWB	70900936	70900936	SPACER, .750 R (#4),.187 SWAGE BRASS	SP1
1	375SOWH	70900782	70900782	SPCR,R,C2X3/8,SW,AL,ST	SP2
1	500STW	70901859	70901859	SPCR,R,TA-40X1/2,SW,AL,ST	SP3
1	750SOWB	70900936	70900936	SPACER, .750 R (#4),.187 SWAGE BRASS	SP4
1	375SOWH	70900782	70900782	SPCR,R,C2X3/8,SW,AL,ST	SP5
1	500STW	70901859	70901859	SPCR,R,TA-40X1/2,SW,AL,ST	SP6
1	750SOWB	70900936	70900936	SPACER, .750 R (#4),.187 SWAGE BRASS	SP7
1	375SOWH	70900782	70900782	SPCR,R,C2X3/8,SW,AL,ST	SP8
1	500STW	70901859	70901859	SPCR,R,TA-40X1/2,SW,AL,ST	SP9
1	750SOWB	70900936	70900936	SPACER, .750 R (#4),.187 SWAGE BRASS	SP10
1	375SOWH	70900782	70900782	SPCR,R,C2X3/8,SW,AL,ST	SP11
1	500STW	70901859	70901859	SPCR,R,TA-40X1/2,SW,AL,ST	SP12
1	TB1129	70901129	70901129	2455R-8082-723 95 DEGREE THERMAL BRKR	TB1
5	4560	4560	70614560	4560 DUAL OP AMP IC	U1, U2, U3, U4, U5
1	250KAVB	71190514	71190514	250K AUD MIN VPC W/BRACKET	VR1
1	1MAVBP5	71190522	71190522	1 MEG AUD MIN VPC 5% TAPER W/BRKT	VR2
1	20KBVB	71190518	71190518	20K LIN MIN VPC W/BRACKET	VR3
1	250KBVB	71190515	71190515	250K LIN MIN VPC W/BRACKET	VR4
2	1MAVBP5	71190522	71190522	1 MEG AUD MIN VPC 5% TAPER W/BRKT	VR5, VR6
1	20KBV3	71190518	71190518	20K LIN MIN VPC W/BRACKET	VR7
2	250KBVB	71190515	71190515	250K LIN MIN VPC W/BRACKET	VR8, VR9
1	1MAVBP5	71190522	71190522	1 MEG AUD MIN VPC 5% TAPER W/BRKT	VR10
3	250KBVB	71190515	71190515	250K LIN MIN VPC W/BRACKET	VR11, VR12, VR13
1	50KBVB	71190511	71190511	50K LIN MIN VPC W/BRACKET	VR14
1	10KBVB	71190510	71190510	10K LIN MIN VPC W/BRACKET	VR15
1	250KAVB	71190514	71190514	250K AUD MIN VPC W/BRACKET	VR16
1	10KCVB	71190523	71190523	10K RA MIN VPC 20% TAPER W/BRKT	VR17
1	10KACDVB	71190542	71190542	10KA/10KC DUAL MIN VPC W/BRKT	VR18

****