SELMER ALL PURPOSE 30

Schematic drawn by Albert Kreuzer 2002
www.albertkreuzer.com

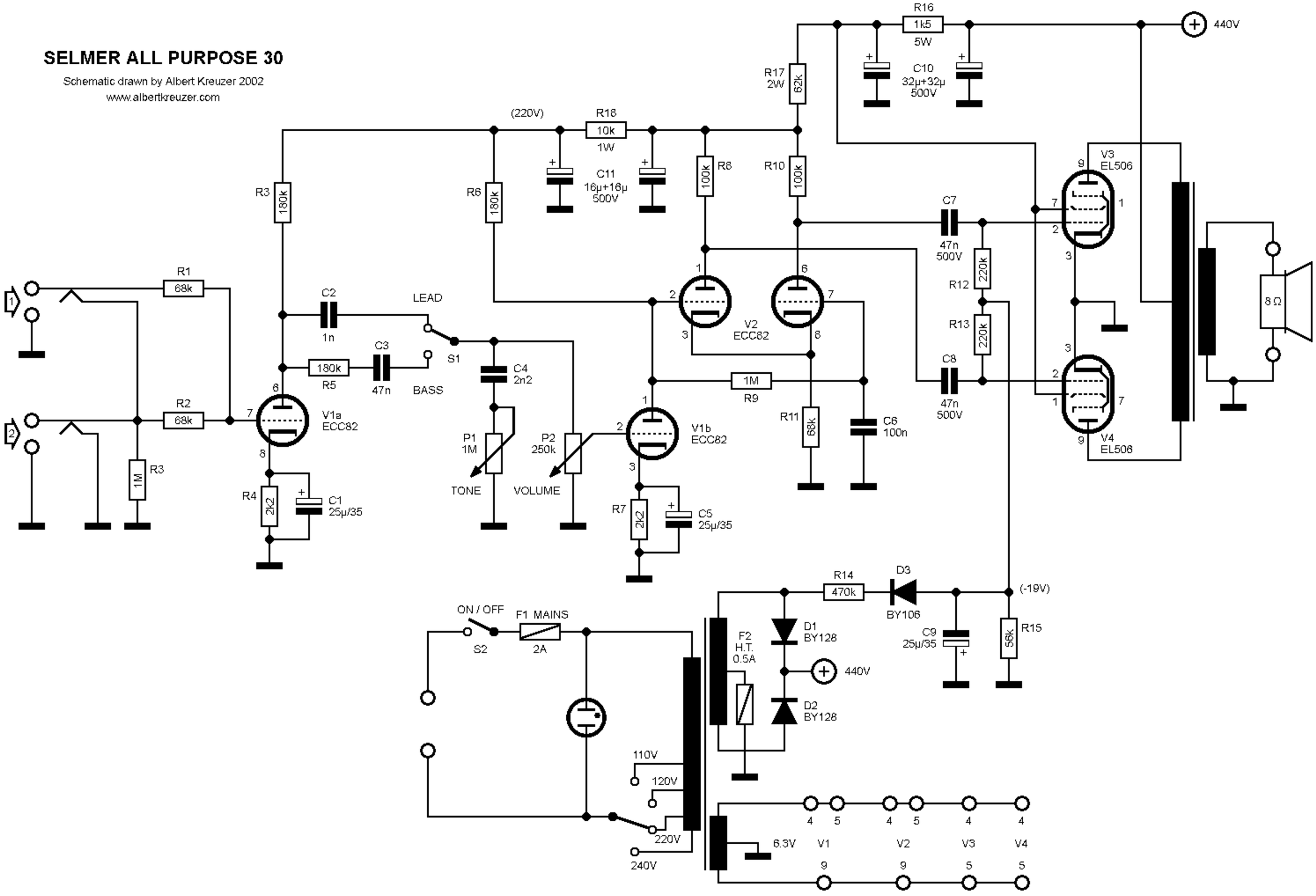

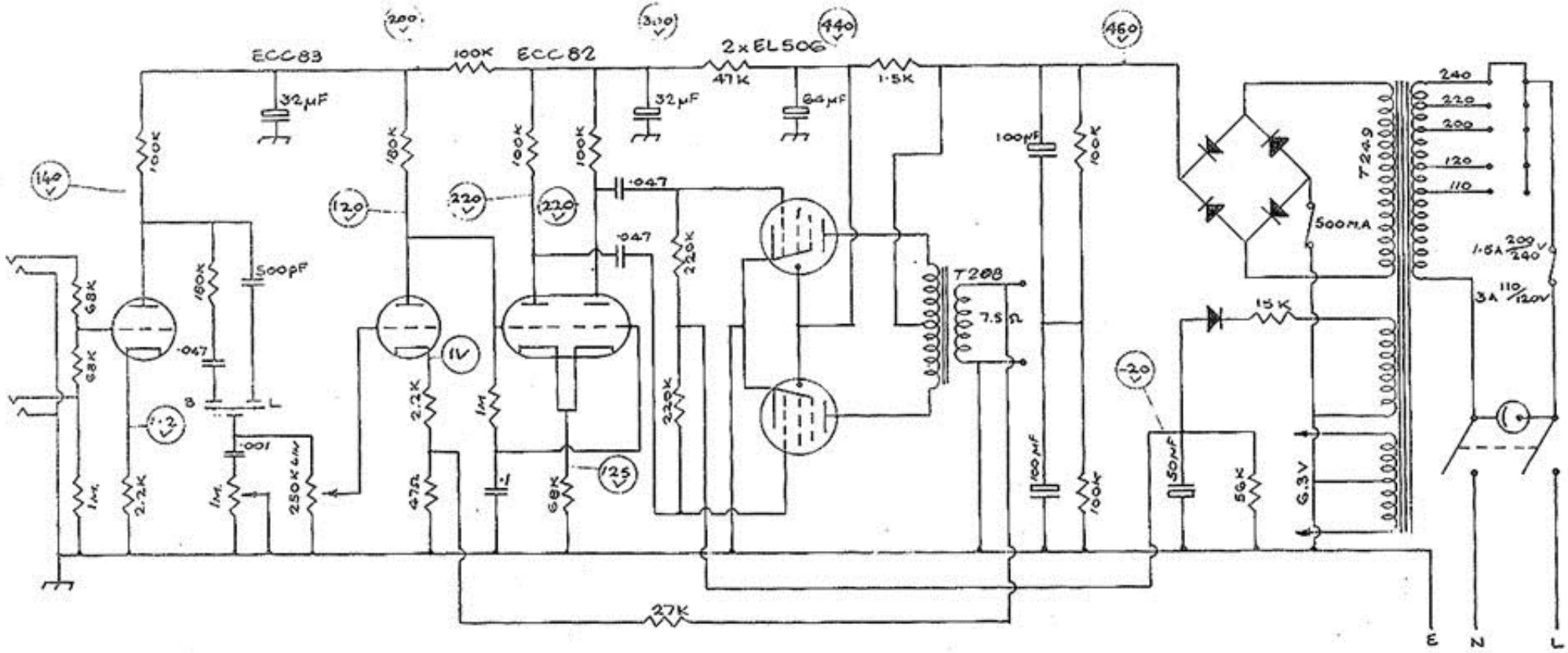

A.P. 30 S.V.

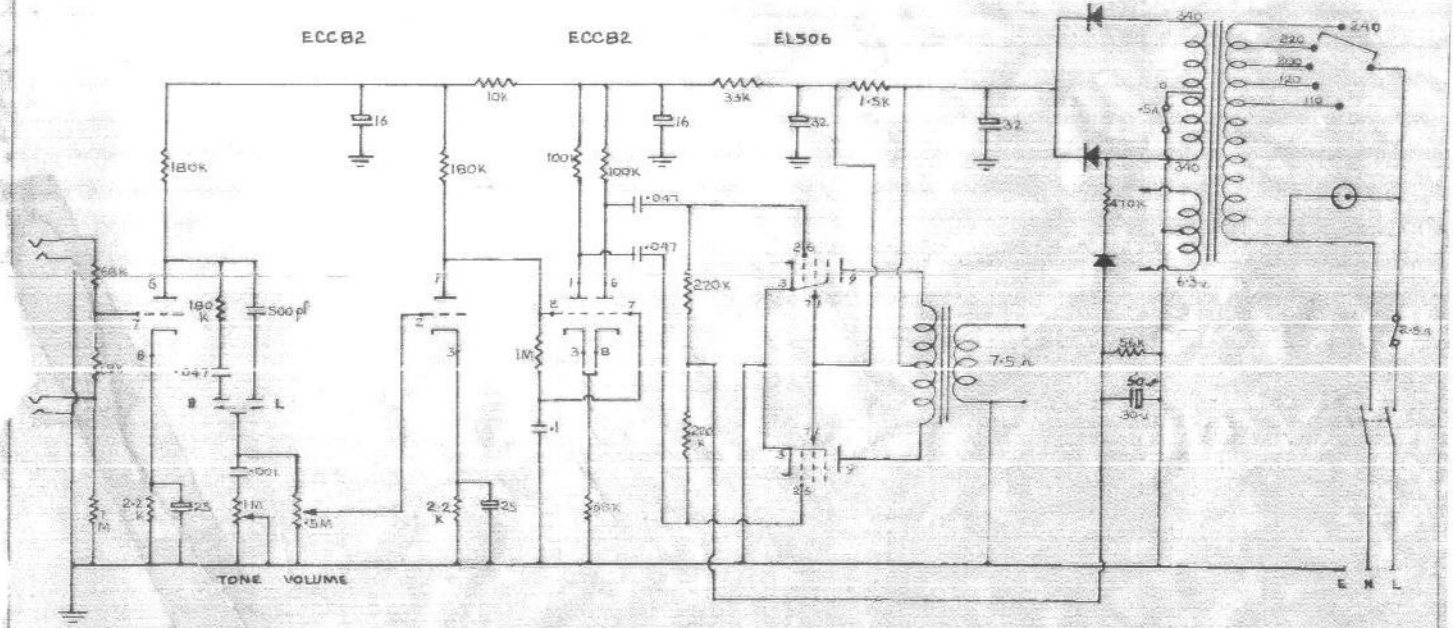

ALL PURPOSE 30

2559/D104