REVISION RECORD			
LTR	ECO NO:	APPR.	DATE:

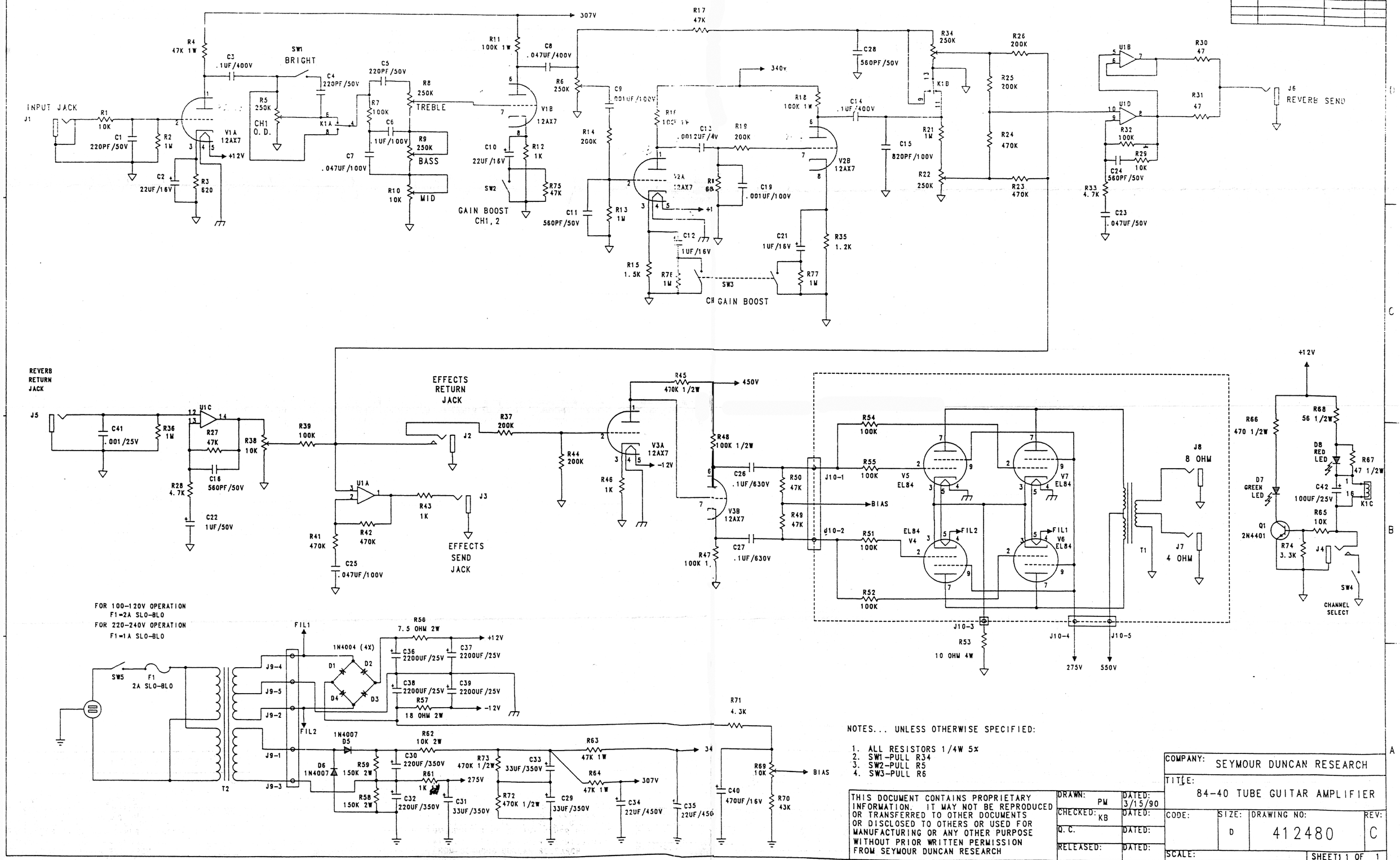

NOTES... UNLESS OTHERWISE SPECIFIED:

1. ALL RESISTORS 1/4W 5%
2. SW1-PULL R34
3. SW2-PULL R5
4. SW3-PULL R6

THIS DOCUMENT CONTAINS PROPRIETARY INFORMATION. IT MAY NOT BE REPRODUCED OR TRANSFERRED TO OTHER DOCUMENTS OR DISCLOSED TO OTHERS OR USED FOR MANUFACTURING OR ANY OTHER PURPOSE WITHOUT PRIOR WRITTEN PERMISSION FROM SEYMOUR DUNCAN RESEARCH

DRAWN: PW	DATED: 3/15/90	
CHECKED: KB	DATED:	
Q. C.	DATED:	
RELEASED:	DATED:	

COMPANY: SEYMOUR DUNCAN RESEARCH

TITLE: 84-40 TUBE GUITAR AMPLIFIER

CODE:	SIZE:	DRAWING NO:	REV:
	D	412480	C

SCALE: SHEET 1 OF 1