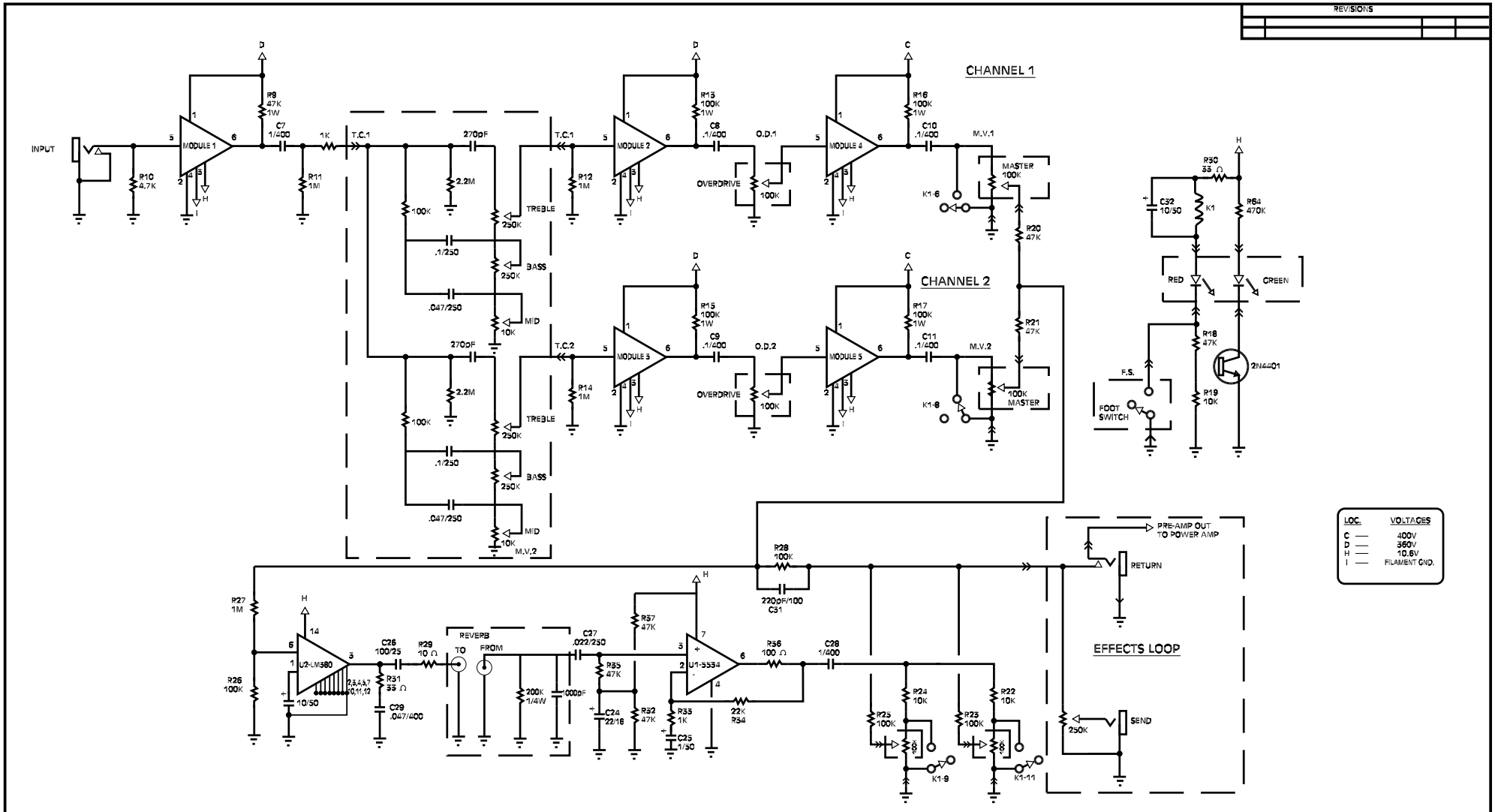

2 ALL POT CASES CONNECTED TO PCB GROUND
1 ALL RESISTORS 1/2 W AND 5% UNLESS OTHERWISE NOTED

NOTES: UNLESS OTHERWISE SPECIFIED

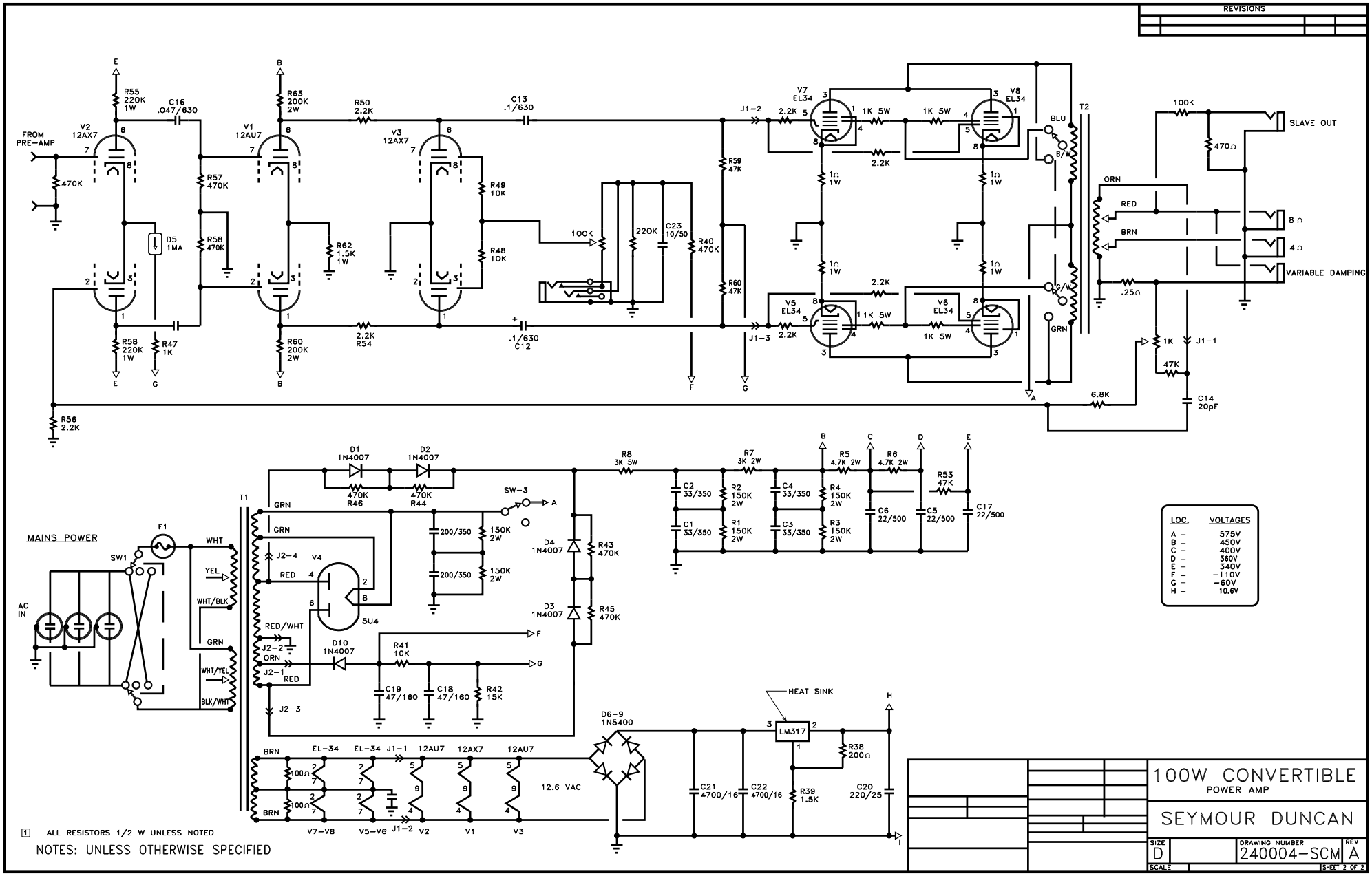
REVISIONS
FROM PRE-AMP
V2 12AX7
V1 12AU7
V3 12AX7
V7 EL34
V8 EL34
V5 EL34
V6 EL34
T2
SLAVE OUT
VARIABLE DAMPING
MAINS POWER
AC IN
SW1
F1
T1
V4 5U4
SW-3
D1 1N4007
D2 1N4007
D3 1N4007
D4 1N4007
D10 1N4007
D6-9 1N5400
LM317
HEAT SINK
12.6 VAC
EL-34
12AU7
12AX7
V7-V8
V5-V6
V2
V1
V3
LOC. VOLTAGES
A – 575V
B – 450V
C – 400V
D – 360V
E – 340V
F – -110V
G – -60V
H – 10.6V
1 ALL RESISTORS 1/2 W UNLESS NOTED
NOTES: UNLESS OTHERWISE SPECIFIED
100W CONVERTIBLE
POWER AMP
SEYMOUR DUNCAN
SIZE D
DRAWING NUMBER 240004-SCM
REV A
SCALE
SHEET 2 OF 2

REVISIONS			
REV	DESCRIPTION	DATE	APPR

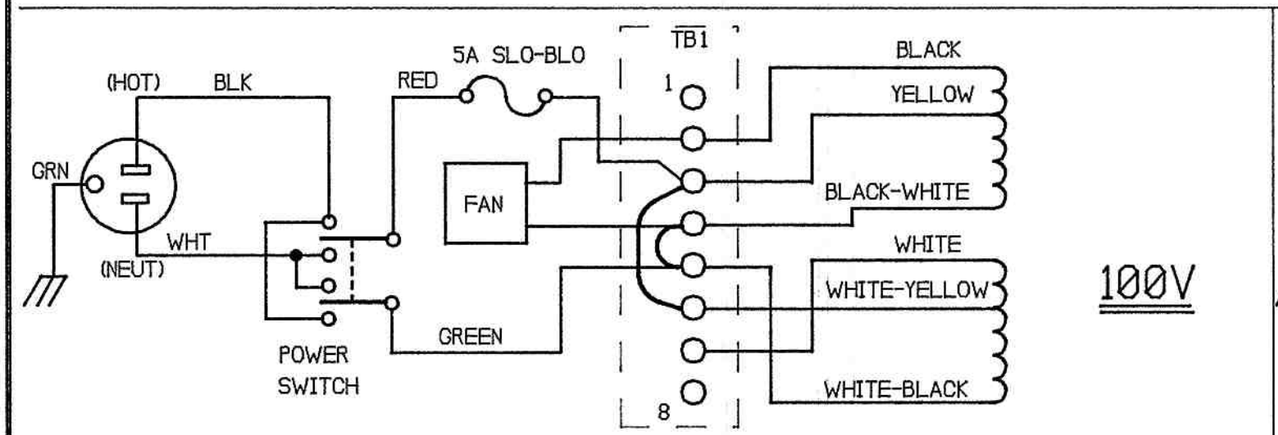

100V

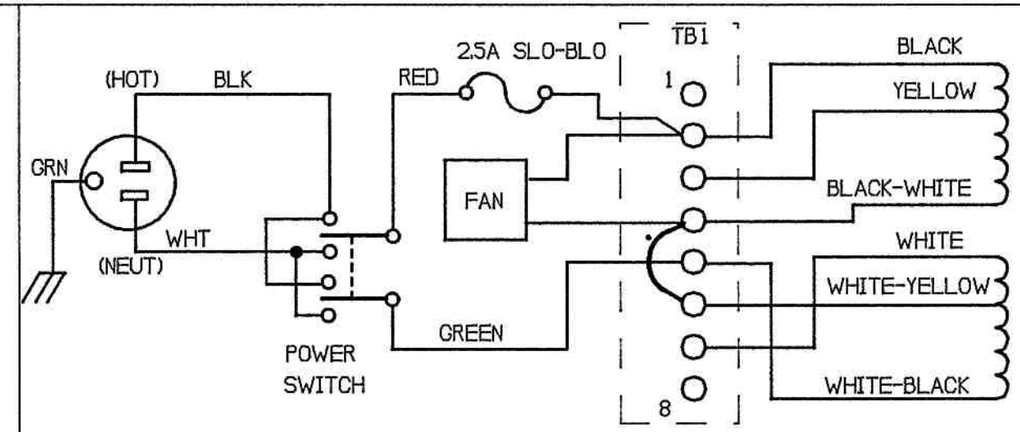

220V

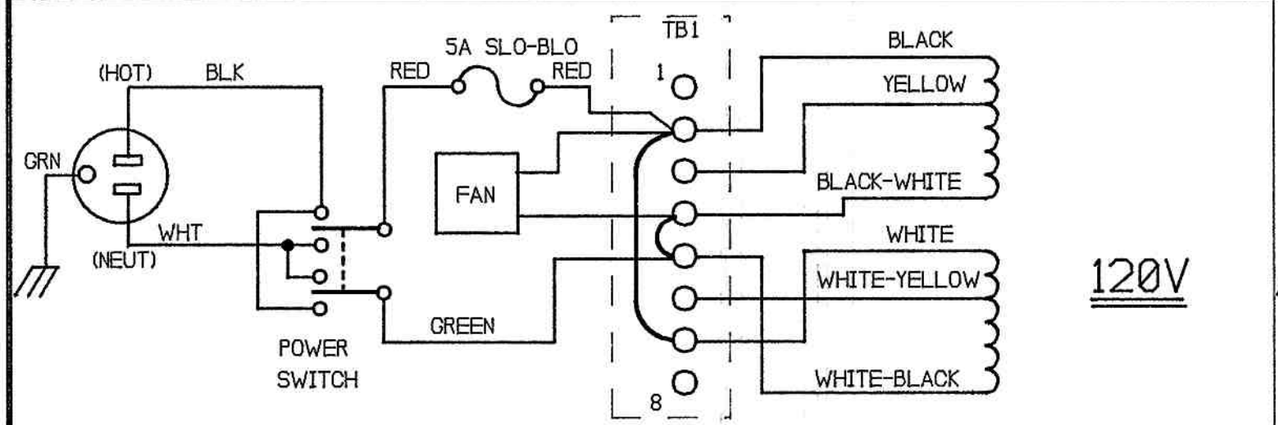

120V

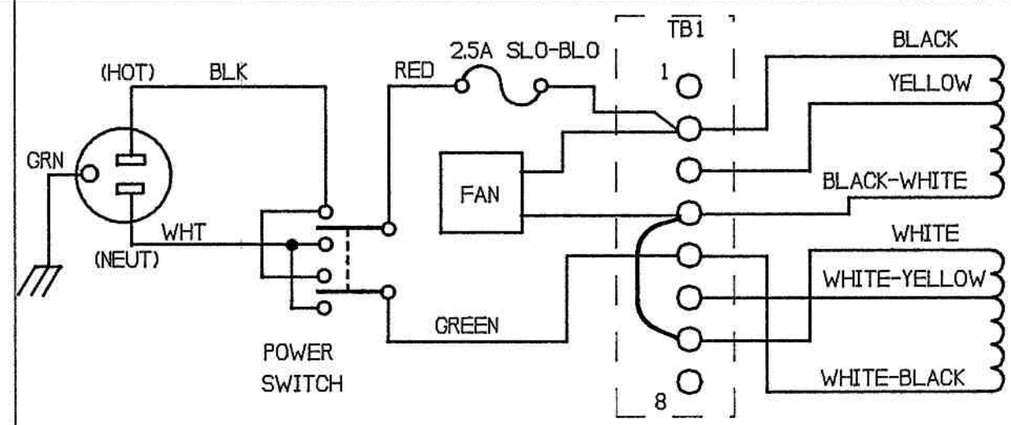

240V

NOTES: UNLESS OTHERWISE SPECIFIED

INTERPRET DRAWING PER ANSI Y14
DIMENSIONS ARE IN INCHES AND APPLY AFTER PLATING
BREAK SHARP EDGES

DWN	J F PARSONS	DATE	03/30/93
CHECK			
PROJ ENGR	KEVIN BELLER		3/30/93
APPR			
NEXT ASSY		USED ON	

THIS DOCUMENT CONTAINS PROPRIETARY INFORMATION. IT MAY NOT BE REPRODUCED OR TRANSFERRED TO OTHER DOCUMENTS OR DISCLOSED TO OTHERS USED FOR MANUFACTURING OR ANY OTHER PURPOSE WITHOUT PRIOR WRITTEN PERMISSION.

SEYMOUR DUNCAN RESEARCH

POWER TRANSFORMER PRIMARY CONN'S, 100W CONVERTIBLE

POST DOCUMENTATION FOR ORIGINAL MODEL

SIZE	DRAWING NUMBER	REV
B	240005-XXX	99
SCALE 1X		SHEET OF