ALL IMP MODELS SUFFIX ?A?

Standel

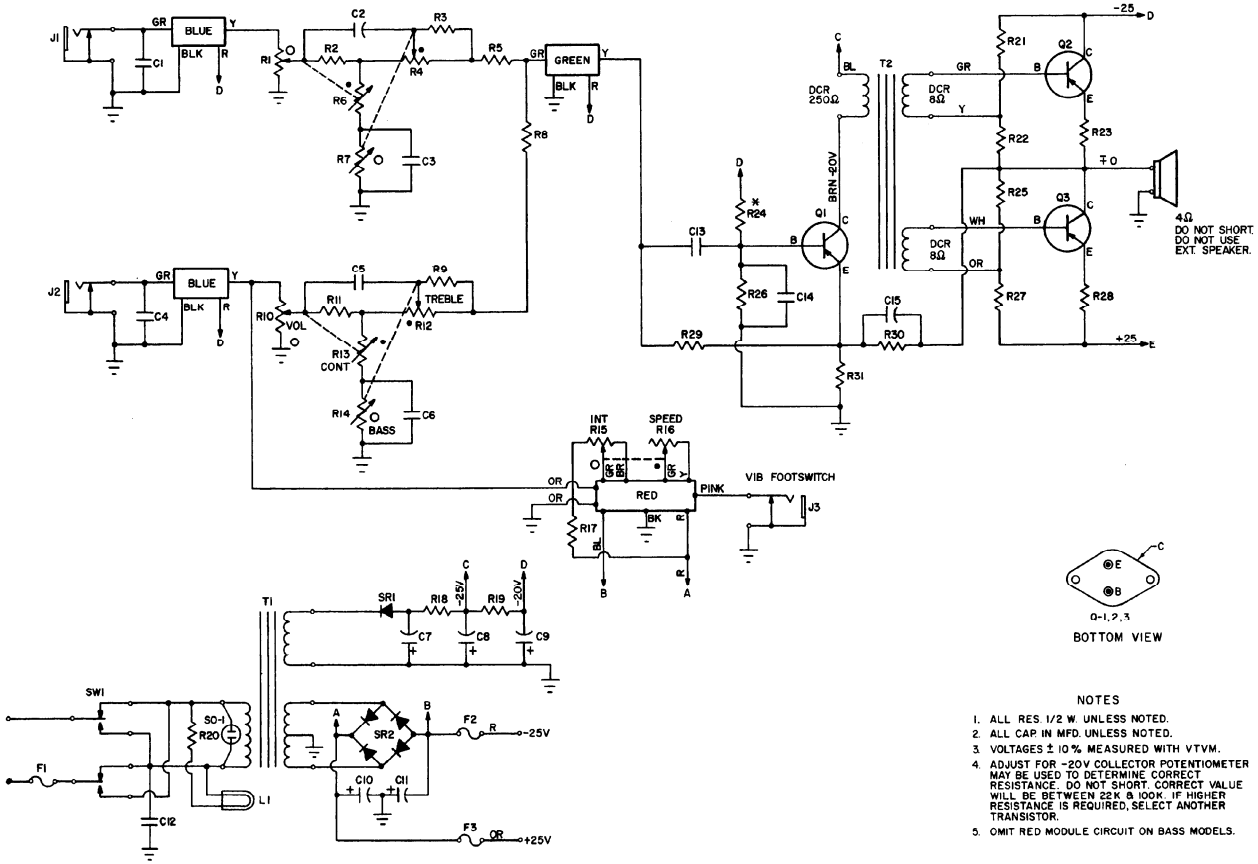

BOTTOM VIEW

NOTES

1. ALL RES. 1/2 W. UNLESS NOTED.
2. ALL CAP IN MFD. UNLESS NOTED.
3. VOLTAGES ± 10% MEASURED WITH VTVM.
4. ADJUST FOR -20V COLLECTOR POTENTIOMETER MAY BE USED TO DETERMINE CORRECT RESISTANCE. DO NOT SHORT. CORRECT VALUE WILL BE BETWEEN 22K & 100K. IF HIGHER RESISTANCE IS REQUIRED, SELECT ANOTHER TRANSISTOR.
5. OMIT RED MODULE CIRCUIT ON BASS MODELS.

ITEM	PART NO	DESCRIPTION	ORIG DWG. 3-18-65
R1	25K	POT.	
R2	10K	RESISTOR	
R3			
R4		POT.	
R5	2.2K	RESISTOR	
R6	1K		
R7	10K		
R8	2.2K		
R9	10K		
R10	25K	POT.	
R11	10K	RESISTOR	
R12		POT.	
R13	1K	RESISTOR	
R14	25K		
R15	25K	POT.	
R16	1K		
R17	10K	RESISTOR	
R18	270Ω		
R19	1K		
R20	100K		
R21	470Ω 2-WATT		
R22	2.7Ω		
R23	.47Ω		
R24	SEE NOTE 4		
R25	470Ω 2-WATT		
R26	1K		
R27	2.7Ω		
R28	.47Ω		
R29	2.2K		
R30	150Ω		
R31	4.7Ω, 1-WATT		
C1	100 PF	CAPACITOR	
C2	.01		
C3	.22		
C4	100 PF		
C5	.01		
C6	.22		
C7	100/50		
C8	250/25		
C9	250/25		
C10	1000/25		
C11	1000/25		
C12	.02/600		
C13	10/15		
C14	.01		
C15	.01		
Q1	2N663	TRANSISTOR	
Q2	DTG110		
Q3	DTG110		
SR1	SC2E	SIL. RECT.	
SR2	66-5999		
J1		CLOSED CKT. JACK	
J2			
J3			
L1		PILOT LAMP	
F1	1A	FUSE	
F2	3A		
F3	3A		
SW1		D.P.D.T. CENTER OFF	
T1	620	POWER TRANS.	
T2	99A7	DRIVER TRANS.	
SO-1		STD. OUTLET	

THE STANDEL CO.
TEMPLE CITY, CALIF.

SCHEMATIC DIAGRAM
ALL IMPERIAL MODELS
WITH SUFFIX "A"
S110A

DRAFTSMAN	CHECKED	APPROVED	DATE
I.D.S.			