200S schematic

effective: November 1, 1967

Sunn Musical Equipment Company
amburn industrial park
tualatin, oregon 97062
tel. 503/638-4115
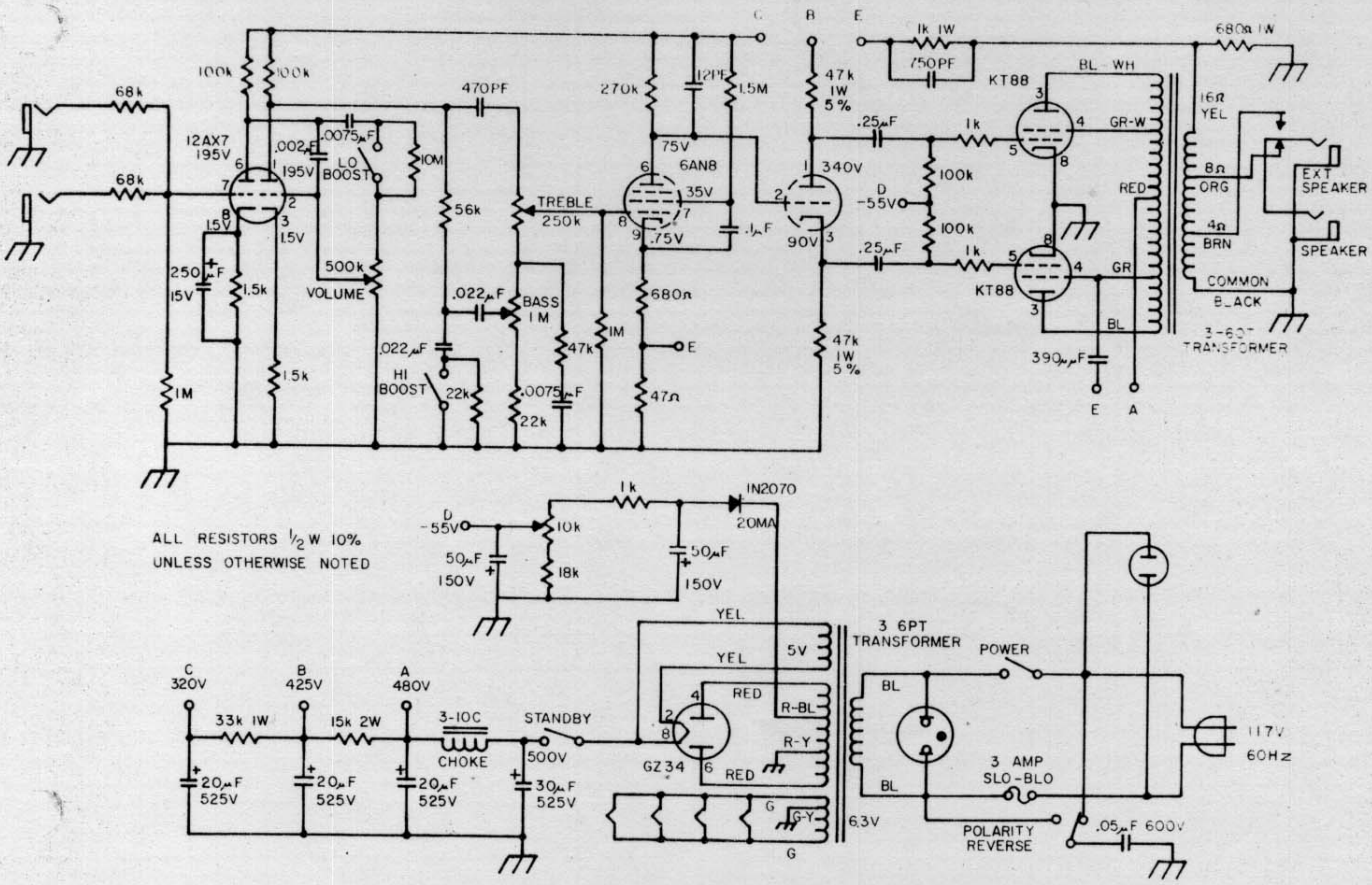
sunn