Supro 1624T

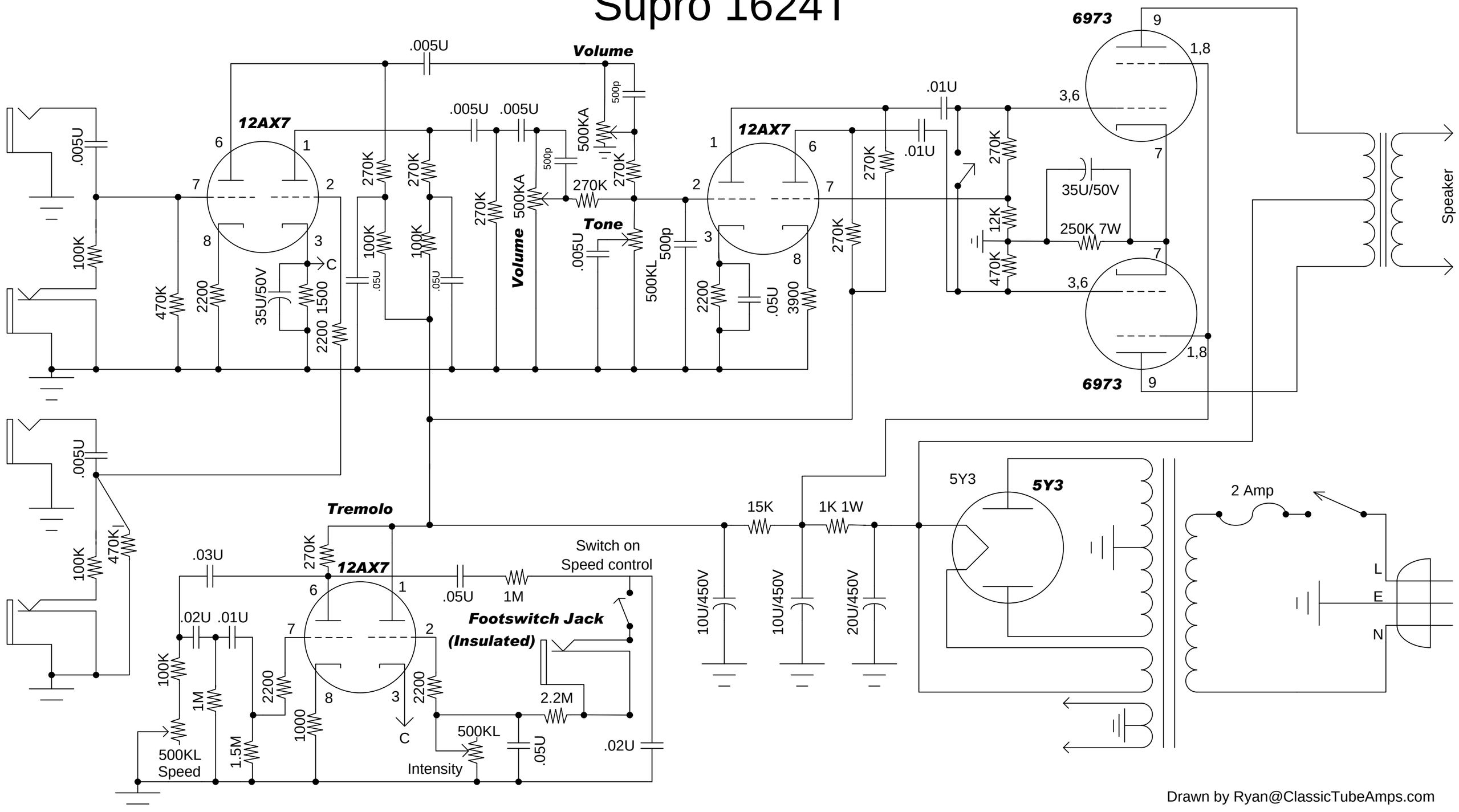

Drawn by Ryan@ClassicTubeAmps.com