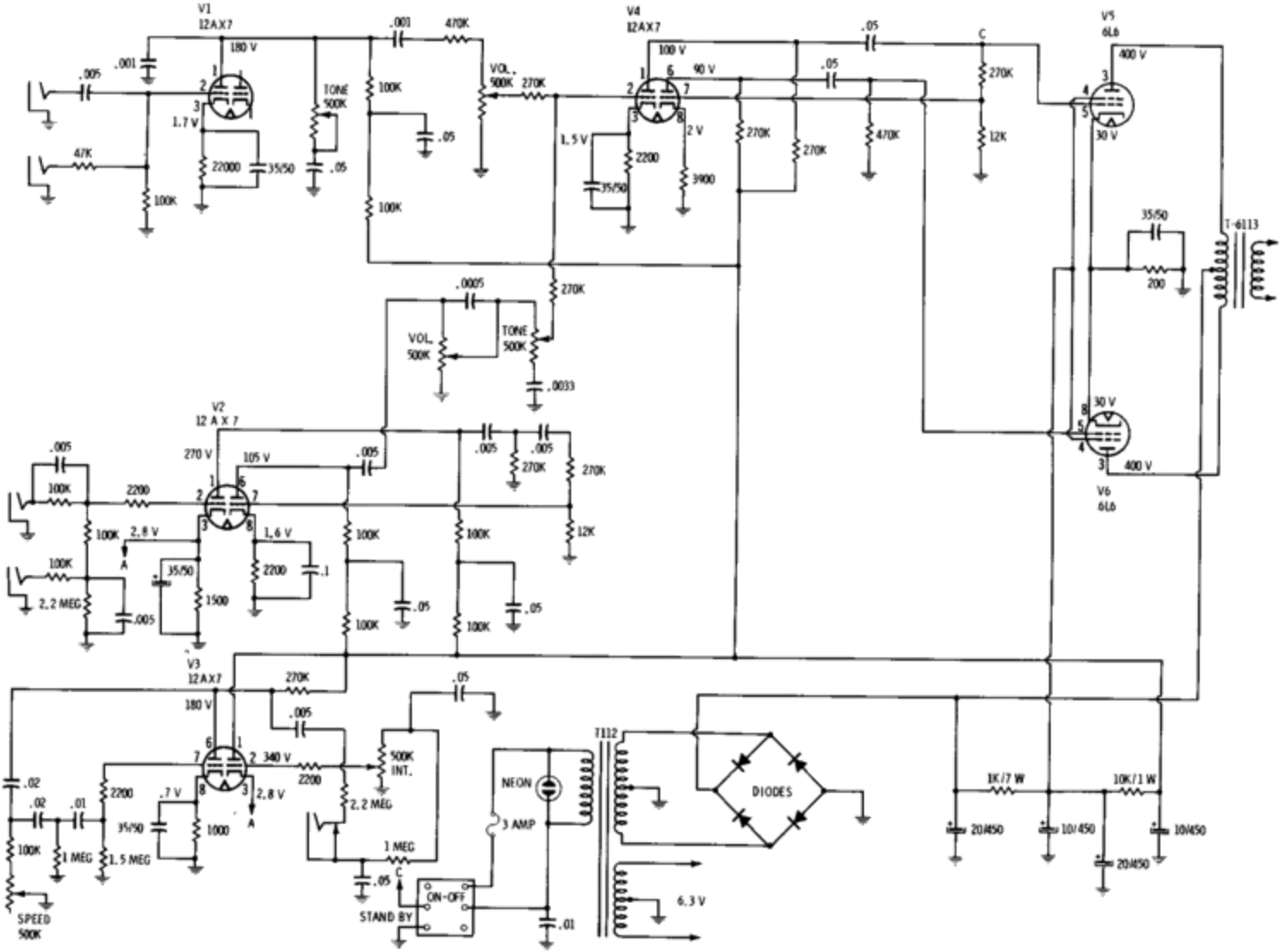

Gretsch Model G6158/6159