| Rev. | Revision note | Date | By |
|---|---|---|---|
| 1 | ADDED VOLTAGE NOTES | 04/05/06 | SCW |
| 2 | ADDED FILTER CAP NOTE | 04/05/06 | SCW |
| 3 | ADDED CATHODE RES. NOTE | 04/05/06 | SCW |
| 4 | REVISED VOLTAGE ESTIMATES | 04/06/06 | SCW |
| 5 | CORRECTED CATHODE RESISTOR VALUES | 04/24/06 | SCW |
| 6 | CORRECTED RESISTOR VALUE | 04/24/06 | SCW |
| 7 | ADDED NOTE ABOUT SOCKET WIRING | 09/13/06 | SCW |
| 8 | CORRECTED PHASE INVERTER WIRING | 11/27/07 | SCW |
| 9 | CORRECTED VOLTAGE AT NODE A | 12/03/13 | SCW |

USE ONLY 5881, 6L6GB OR 6L6GC TUBES.
EL34/6CA7, 7027, OR 6550 SHOULD NOT BE USED. OUTPUT TRANSFORMER IMPEDANCE IS NOT CORRECT FOR THESE TUBES. THESE OTHER TUBES MAY ALSO OVERSTRESS THE FILAMENT WINDING OF THE POWER TRANSFORMER.

A CURRENT PRODUCTION OUTPUT TRANSFORMER IS THE 40-18061 FROM WWW.CLASSICTONE.NET

OUTPUT TRANSFORMER
SUPRO NUMBER T3778
SUPPLIED BY TRIWEC
EIA CODE 524
A 35 WATT UNIT WITH A
5000:8 IMPEDANCE RATIO

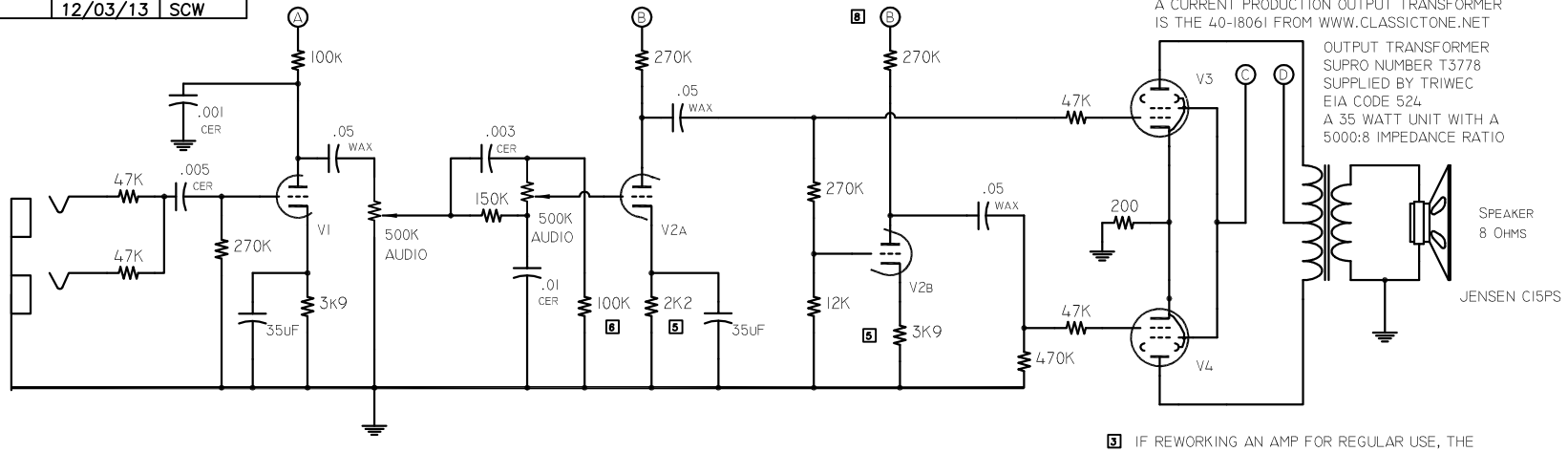


3 IF REWORKING AN AMP FOR REGULAR USE, THE BIASING OF THE OUTPUT TUBES SHOULD BE VERIFIED. THE 200 OHM RESISTOR CAN BE EXCHANGED FOR A 220 OR 240 OHM UNIT.
INCREASING THE RESISTOR VALUE WILL DECREASE THE HARMONIC RICHNESS OF THE AMPLIFIER OUTPUT, BUT WILL GIVE EXTENDED TUBE LIFE. THE SOUND IS NOTICEABLY COLDER WITH A 240 OHM RESISTOR.

1 ORIGINAL AMPS DESIGNED FOR 117VAC LINE POWER
SEVERAL PEOPLE HAVE REPORTED GREATLY DIFFERENT VALUES, ESPECIALLY IN THE PREAMP
VOLTAGE MEASUREMENTS ARE ± 20%

THE 40-18060 FROM CLASSICTONE.NET CANNOT BE USED AS A REPLACMENT POWER TRANSFORMER FOR THE SOLID STATE RECTIFIER MODEL. THE BEST OPTION FOR REPLACMENT IS THE HEYBOER HTS-4664.
WHEN FITTING A GROUNDED CORD, SECURE GROUND WIRE UNDER TRANSFORMER BOLT

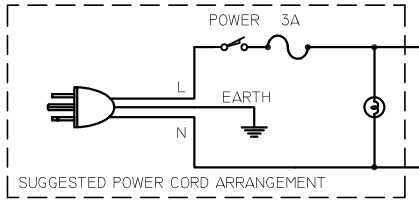

SUGGESTED POWER CORD ARRANGEMENT

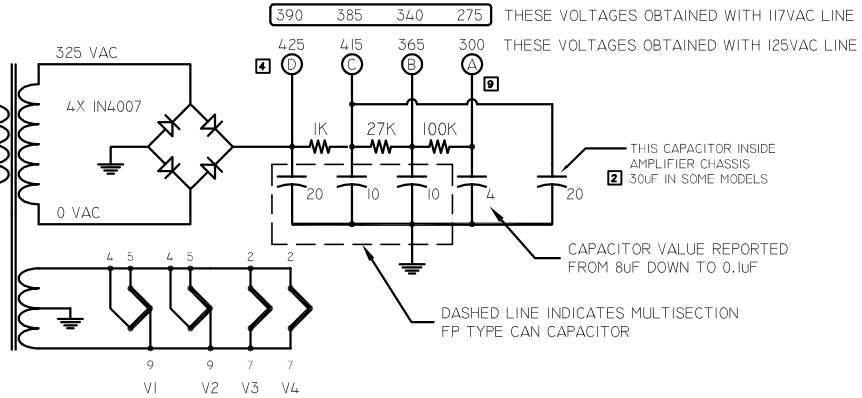


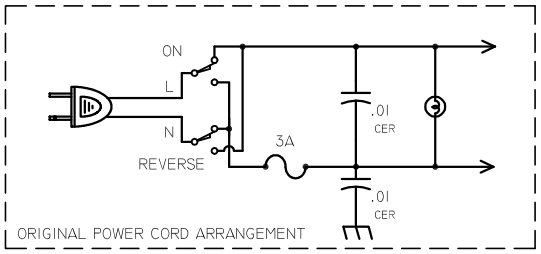

ORIGINAL POWER CORD ARRANGEMENT

THE 1964 AND 1965 MODELS WERE COVERED IN A BLUE MATERIAL AND FEATURED A TUBE RECTIFIER
THE 1966 MODEL WAS COVERED IN BLACK AND HAD A SOLID STATE RECTIFIER FITTED AFTER MID YEAR.

THE S6420 THUNDERBOLT WAS DISCONTINUED SOMETIME IN 1967. THE S6920 MODEL IS GREATLY DIFFERENT.

NOTES: V1 (12AX7) ONE TRIODE LEFT UNUSED
CAPACITOR VALUES IN uF
FILTER CAPACITORS ARE 450 V
VOLTAGE MEASUREMENTS DC UNLESS SPECIFIED
VOLTAGE MEASUREMENTS REFERENCED TO CHASSIS

## VOLTAGE CHART

VALUES BY MIKE SCARVELIS

| | 1 | 2 | 3 | 4 | 5 | 6 | 7 | 8 | 9 | |
|---|---|---|---|---|---|---|---|---|---|---|
| 12AX7 | 247 | 0 | 2.2 | 3.3AC | 3.3AC | - | - | - | 3.3AC | V1 |
| 12AX7 | 210 | 0 | 2.0 | 3.3AC | 3.3AC | 172 | 0 | 1.5 | 3.3AC | V2 |
| 6L6GC | - | 3.3AC | 415 | 412 | 0.35 | - | 3.3AC | 31.5 | - | V3 |
| 6L6GC | - | 3.3AC | 415 | 412 | 0.35 | - | 3.3AC | 31.5 | - | V4 |

MANY THANKS TO GREG SIMON, CJ POULUS, URIAH THERIAULT, JIM MITCHELL AND MIKE SCARVIN FOR THEIR ASSISTANCE IN GATHERING THIS INFORMATION

# Weatherford Amplifiers

SCALE: NONE
DATE: 12/18/2012
DRAWN BY: S. WEATHERFORD

THIS SCHEMATIC REDRAWN FROM A VERSION PROVIDED BY SCHEMATIC HEAVEN. WEATHERFORD AMPLIFIERS CLAIMS NO RIGHTS TO ANY OF THE INFORMATION CONTAINED IN THIS DRAWING.
THE QUALITY OF THE ORIGINAL WAS POOR AND SOME VALUES WERE DIFFICULT TO DETERMINE.

1966 SUPRO THUNDERBOLT

DRAWING NUMBER
S6420