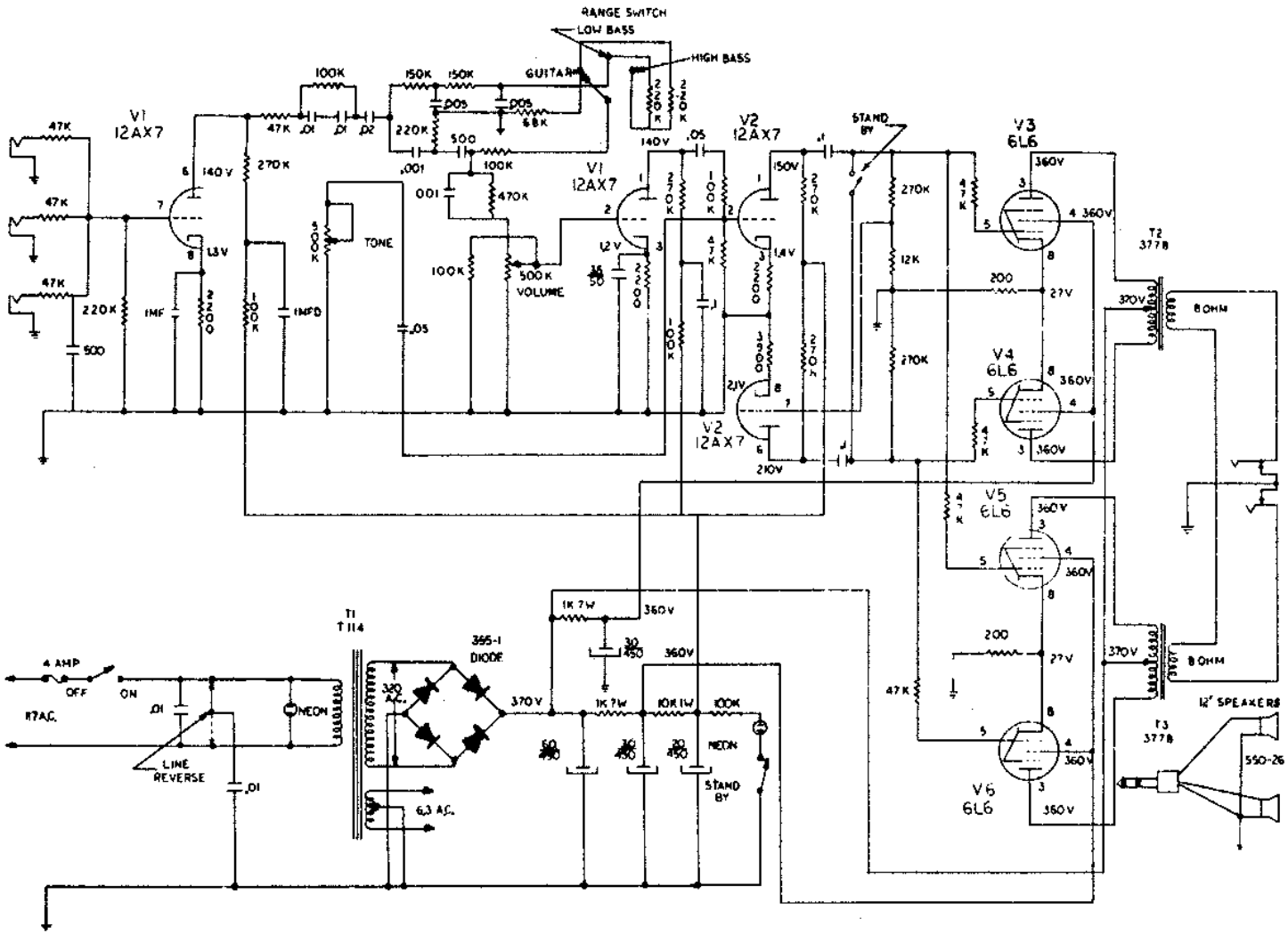

Supro Model S6625