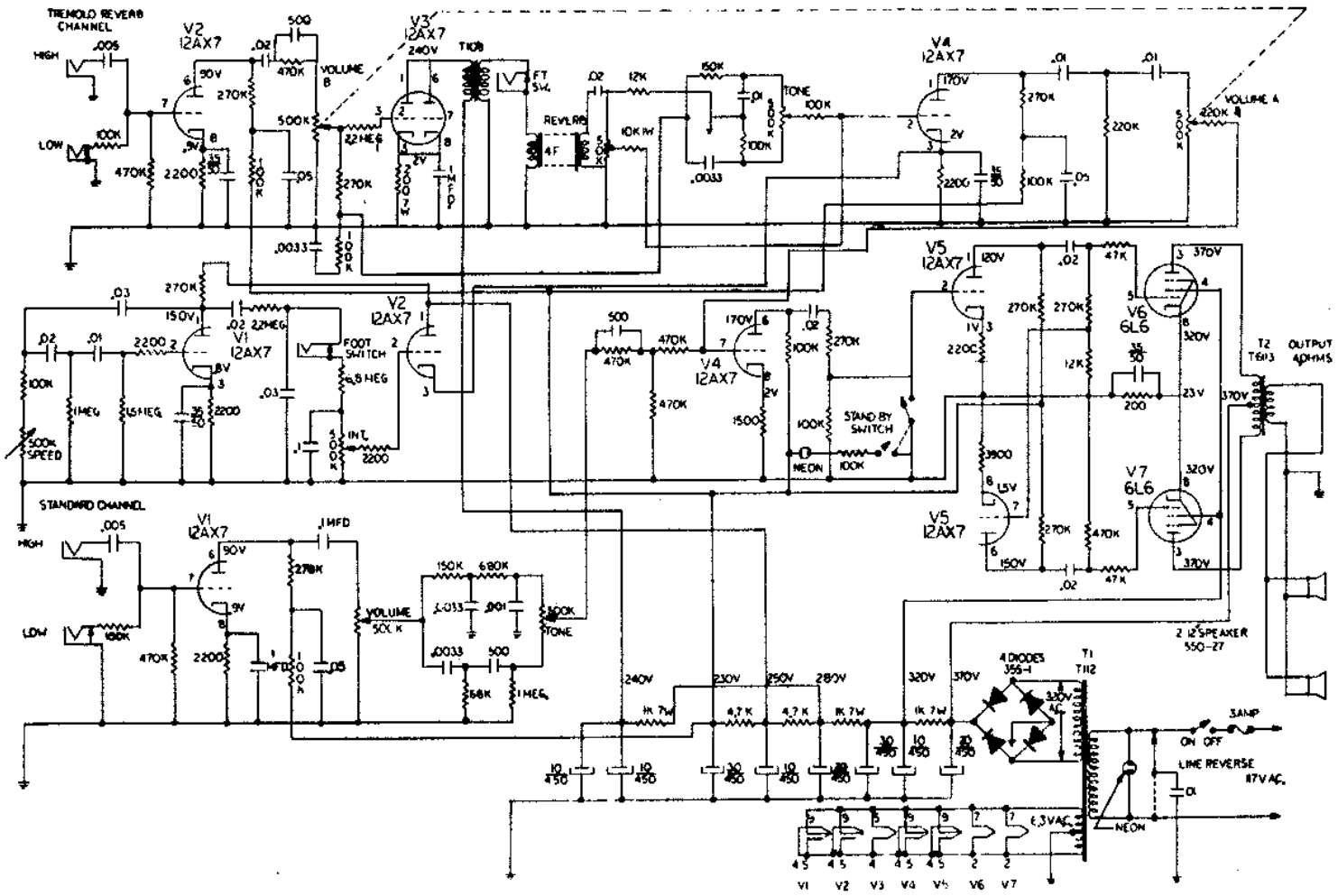

Supro Model S6651