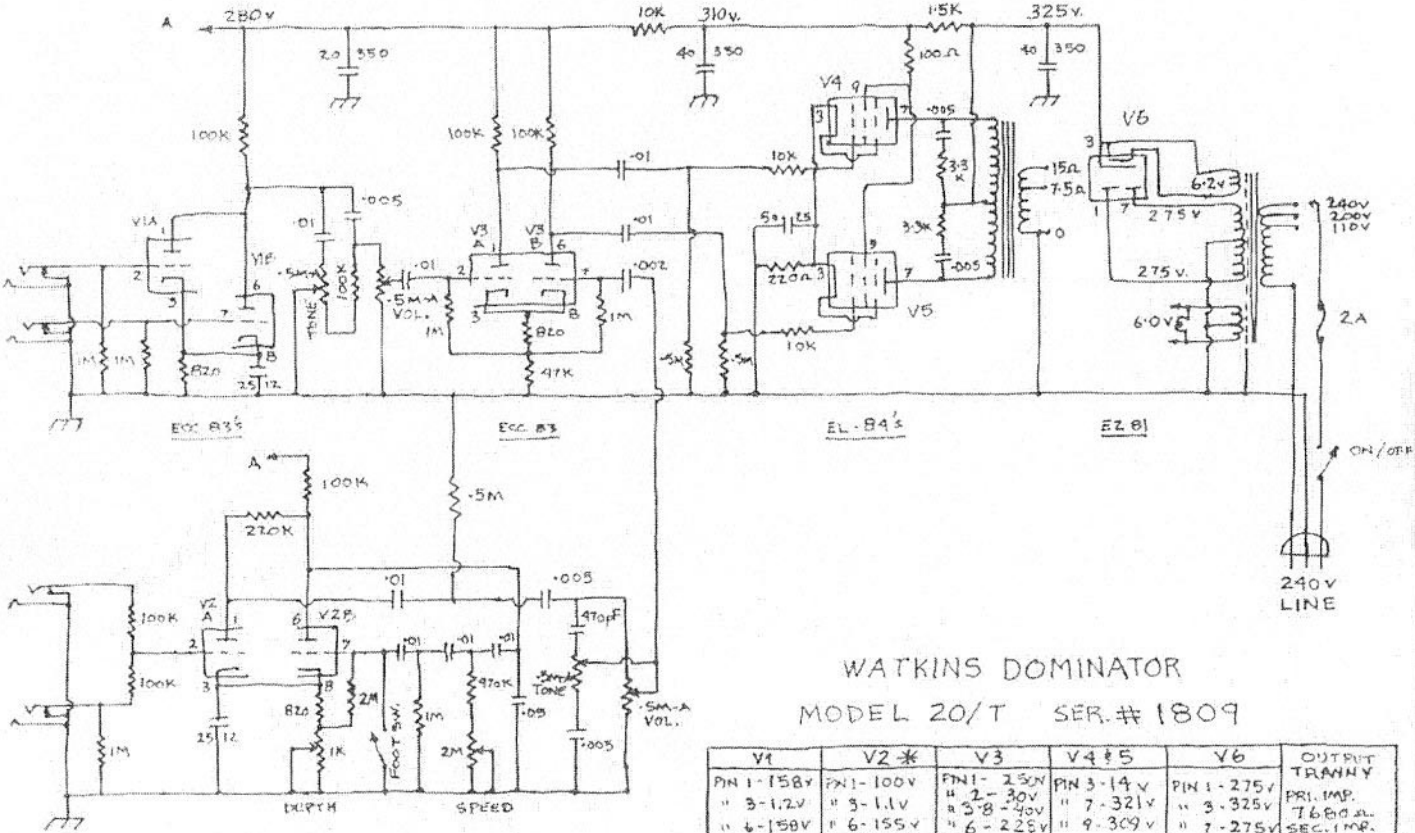

WATKINS DOMINATOR

MODEL 20/T SER. # 1809

V1	V2 *	V3	V4 & 5	V6	OUTPUT TRANNY
PIN 1 - 158V	PIN 1 - 100V	PIN 1 - 250V	PIN 3 - 14V	PIN 1 - 275V	PRI. IMP. 7680 Ω
" 3 - 1.2V	" 3 - 1.1V	" 2 - 30V	" 7 - 321V	" 3 - 325V	SEC. IMP. 7.5 Ω
" 6 - 158V	" 6 - 155V	" 3-8 - 40V	" 9 - 309V	" 7 - 275V	
" 8 - 1.2V	" 8 - 1.1V	" 6 - 225V			
		" 7 - 28V			

* WITH TREMELO DEPTH CONTROL FULL CCW

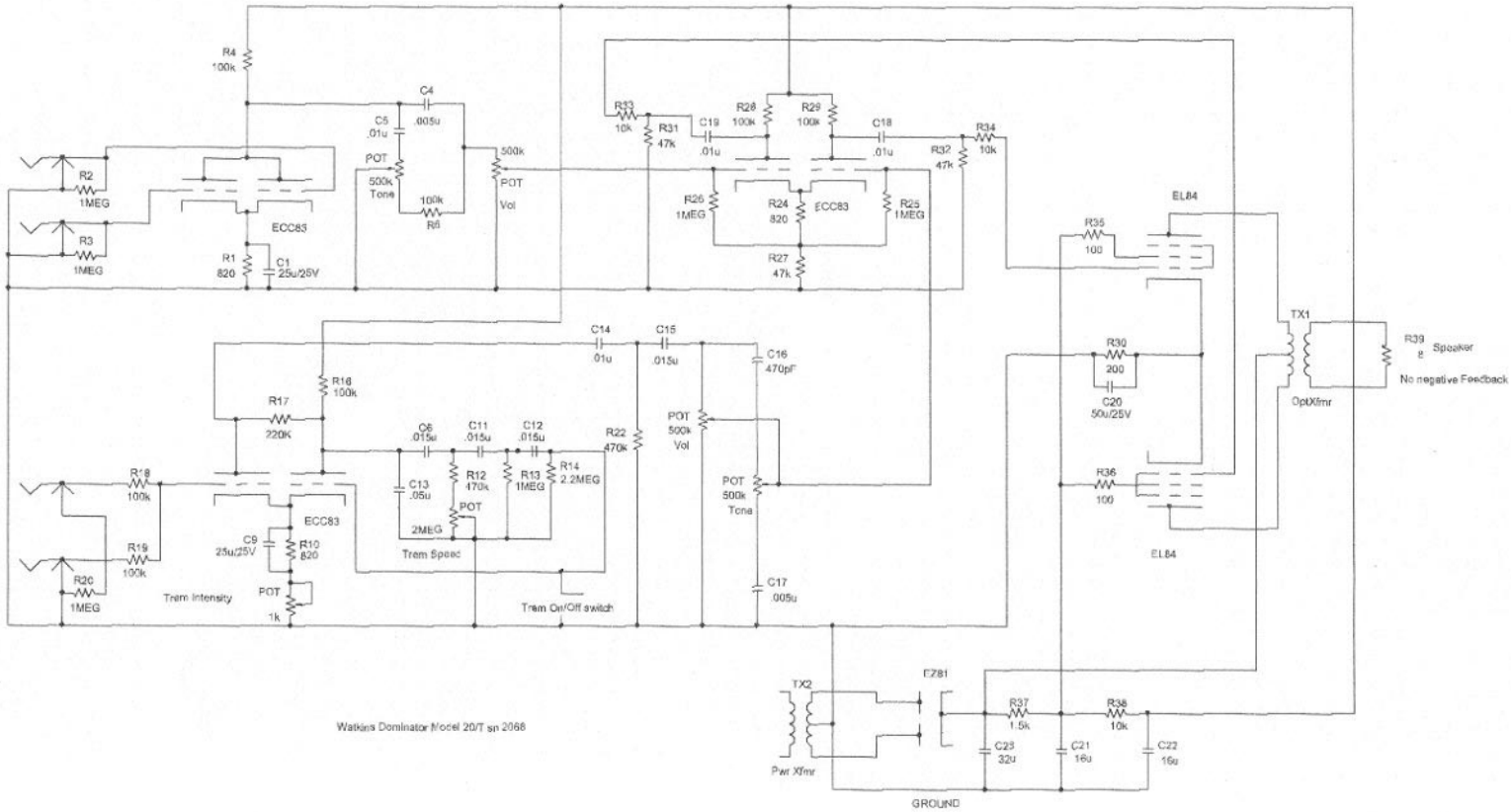

Watkins Dominator Model 20/T sn 2068

Integrated Circuit Designs, Inc.	Page Size B